Swimming Pool Heat Pump

User and Service Manual

Swimming Pool Heat Pump
User and Service Manual

INDEX

Thank you for using INVERBOOST UX swimming pool heat pump for your pool heating, it will heat your pool water and keep the constant temperature when the air ambient temperature is at -20 to 43℃

ATTENTION: This manual includes all the necessary information with the use and the installation of your heat pump.

The installer must read the manual and follow the instructions in implementation and maintenance. The installer is responsible for the installation of the product and should follow all the instructions of the manufacturer and the regulations in application. Incorrect installation against the manual implies the exclusion of the entire guarantee. The manufacturer declines any responsibility for the damage caused by an incorrect installation that do not follow the manual guidelines.

WARNING:

1. Please always empty the water in heat pump during winter time or when the ambient temperature drops below 0℃, or else the Titanium Exchanger will be damaged because of being frozen, in such case, your warranty will be lost.
2. Please always cut the power supply if you want to open the cabinet to reach inside the heat pump, because there is high voltage electricity inside.
3. Please well keep the display controller in a dry area, or well close the insulation cover to protect the display controller from being damaged by humidity.
4. Please always keep the heat pump in the ventilation place and away from anything which could cause fire.
5. Don’t weld the pipe if there is refrigerant inside machine. Please keep the machine out of the space confined when make gas filling.
6. Action of filling gas must be conducted by professional with R32 operating license.

Regulation (EU) n° 517/2014 of 16/04/14 on fluorinated greenhouse gases and repealing Regulation (EC) n° 842/2006

Leak checks

1. Operators of equipment that contains fluorinated greenhouses gases in quantities of 5 tons of CO_2, equivalent or more and not contained in foams shall ensure that the equipment is checked for leaks.

2. For equipment that contains fluorinated greenhouse gases in quantities of 5 tons of CO_2 equivalent or more, but of less than 50 tons of CO_2 equivalent: at least every 12 months.

Picture of the equivalence CO_2

1. Load in kg and Tons amounting CO_2.

Load and Tons amounting CO_2	Frequency of test
From 7.4 at 74 kg load = from 5 at 50 Tons	Each year

Concerning the Gaz R32, 7.4kg amounting at 5 tons of CO_2, commitment to check each year.

Training and certification

1. The operator of the relevant application shall ensure that the relevant personnel have obtained the necessary certification, which implies appropriate knowledge of the applicable regulations and standards as well as the necessary competence in emission prevention and recovery of fluorinated greenhouse gases and handling safety the relevant type and size of equipment.

Record keeping

1. Operators of equipment which is required to be checked for leaks, shall establish and maintain records for each piece of such equipment specifying the following information:

a) The quantity and type of fluorinated greenhouse gases installed;
b) The quantities of fluorinated greenhouse gases added during installation, maintenance or servicing or due to leakage;
c) Whether the quantities of installed fluorinated greenhouse gases have been recycled or reclaimed, including the name and address of the recycling or reclamation facility and, where applicable, the certificate number;
d) The quantity of fluorinated greenhouse gases recovered
e) The identity of the undertaking which installed, serviced, maintained and where applicable repaired or decommissioned the equipment, including, where applicable, the number of its certificate;
f) The dates and results of the checks carried out;
g) If the equipment was decommissioned, the measures taken to recover and dispose of the fluorinated greenhouse gases.

2. The operator shall keep the records for at least five years, undertakings carrying out the activities for operators shall keep copies of the records for at least five years.

1. Specifications

1.1 Technical data

Model		UX11Csi32	UX14Csi32	UX17Csi32
*** Performance at Air 28℃, Water 28℃, Humidity 80%**				
Turbo Heating Capacity	KW	11.0	14.0	17.0
Smart Heating Capacity	KW	10.0	11.0	14.0
Power consumption	kW	1.55-0.17	1.97-0.22	2.39-0.27
C.O.P.		16-7.4	16-7.1	16-7.2
C.O.P. in Turbo Mode		7.4	7.1	7.2
C.O.P. at 50% capacity		11.8	11.0	11.8
*** Performance at Air 15℃, Water 26℃, Humidity 70%**				
Turbo Heating Capacity	kW	8.5	9.5	12.0
Smart Heating Capacity	KW	7.0	8.0	10.5
Power consumption	kW	1.67-0.26	1.90-0.29	2.31-0.37
C.O.P.		8.2-5.1	8.21-5	8.5-5.2
C.O.P. in Turbo Mode		5.1	5.0	5.2
C.O.P. at 50% capacity		7.1	7.0	7.8
***General Date**				
Compressor type		Inverter compressor		
Voltage		220-240V/50Hz/1PH		
Rated current	A	6.9	8.7	10.6
Max current	A	10.5	13.5	15.5
Minimum fuse	A	12.0	15.0	16.0
Advised pool volume (with pool cover)	m^3	16-60	18-66	25-85
Advised water flux	m^3/h	3.7	4.0	5.0
Water pressure drop	Kpa	12.0	14.0	15.0
Heat exchanger		Twist Titanium exchanger		
Water connection	mm	50		
Fan quantity		1		
Ventilation type		Horizontal		
Noise level(10m)	dB(A)	17.8-26.2	21.7-26.7	22.6-28.1
Noise level(1m)	dB(A)	36-46.2	38-47.6	39.5-49.8
Net weight	kg	73	78	98
Gross weight	kg	78	83	113
Net dimension	mm	1028*441*685	1028*441*685	1073*492*886
Packing dimension	mm	1095*525*830	1095*525*830	1140*555*1030

Model		UX21Csi32	UX30Csi32T	UX35Csi32T
*** Performance at Air 28℃, Water 28℃, Humidity 80%**				
Turbo Heating Capacity	KW	21.0	30.0	35.0
Smart Heating Capacity	KW	18.0	25.0	30.0
Power consumption	kW	2.96-0.33	4.17-0.47	4.93-0.55
C.O.P.		16-7.1	16-7.1	16-7.1
C.O.P. in Turbo Mode		7.1	7.1	7.1
C.O.P. at 50% capacity		11.2	11.2	11.2
*** Performance at Air 15℃, Water 26℃, Humidity 70%**				
Turbo Heating Capacity	kW	15.5	20.0	24.0
Smart Heating Capacity	KW	13.5	18.0	22.0
Power consumption	kW	3.04-0.47	3.85-0.61	4.62-0.73
C.O.P.		8.3-5.1	8.2-5.2	8.2-5.2
C.O.P. in Turbo Mode		5.1	5.2	5.2
C.O.P. at 50% capacity		7.4	7.2	7.2
***General Date**				
Compressor type		Inverter compressor		
Voltage		220-240V/50Hz or 60Hz/1PH	380V/50Hz/3PH	
Rated current	A	13.1	7.5	8.8
Max current	A	19.5	12.0	14.0
Minimum fuse	A	22	15	17
Advised pool volume (with pool cover)	m^3	58-120	78-150	85-160
Advised water flux	m^3/h	6.0	10.0	15.0
Water pressure drop	Kpa	15	20	25
Heat exchanger		Twist Titanium exchanger		
Water connection	mm	50		
Fan quantity		1	2	2
Ventilation type		Horizontal		
Noise level(10m)	dB(A	22.9-30.6	23.2-32.4	23.4-32.8
Noise level(1m)	dB(A)	40-51	42-51.8	42.8-52
Net weight	kg	117	130	135
Gross weight	kg	135	148	150
Net dimension	mm	1073*492*886	1130*500*1410	1130*500*1410
Packing dimension	mm	1140*555*1030	1185*565*1555	1185*565*1555

* Above data are subjects to modification without notice.

2. Dimension (mm)

Model :UX11Csi32/UX14Csi32

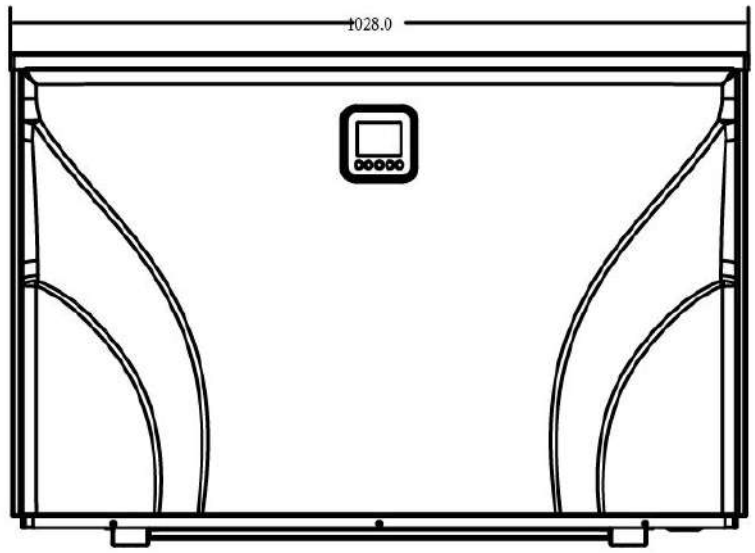

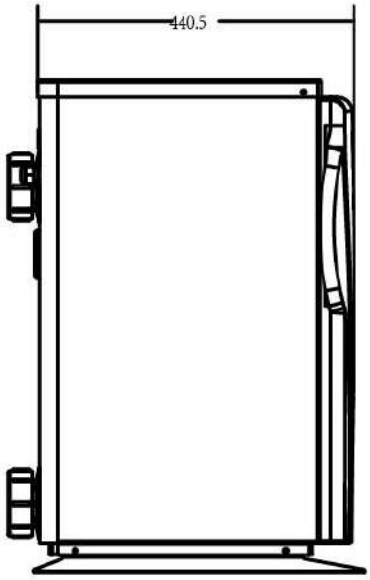

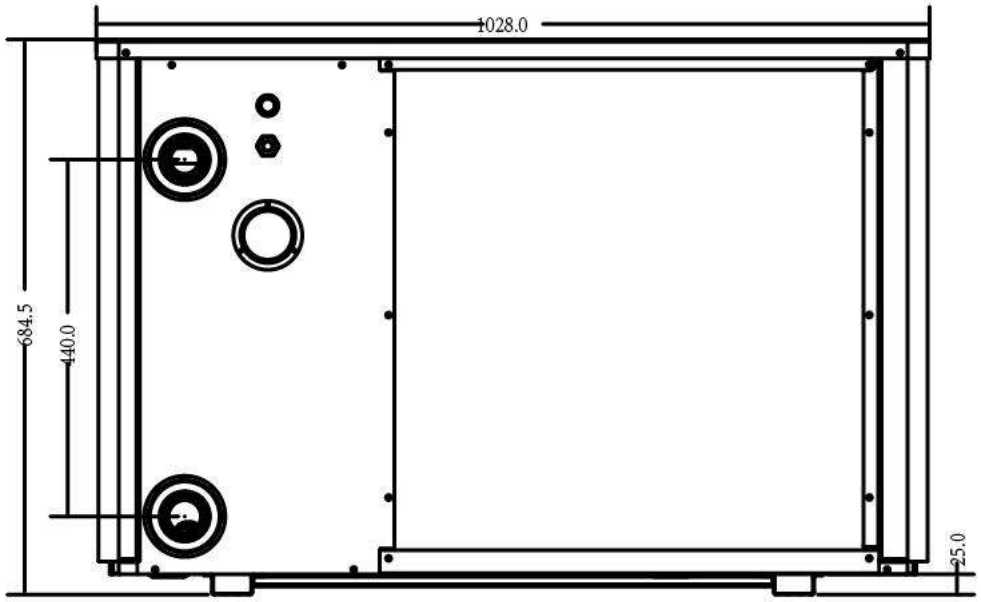

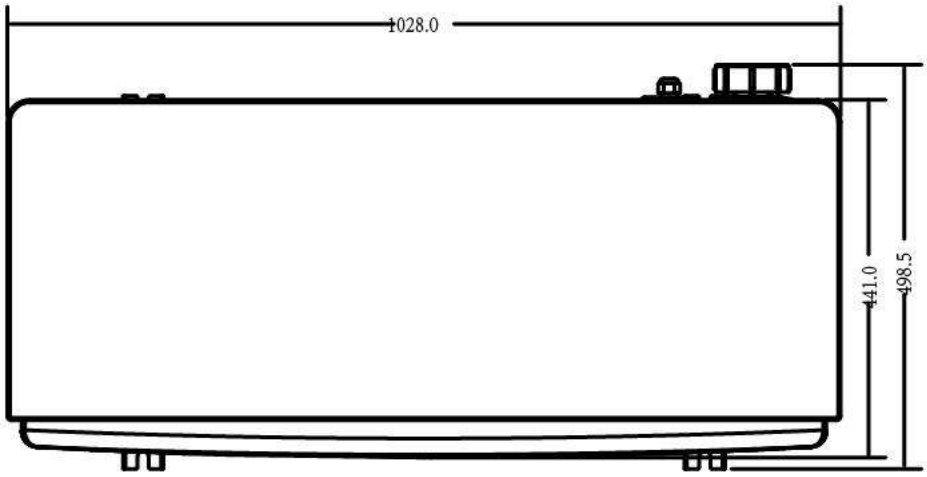

Model :UX17Csi32/UX21Csi32

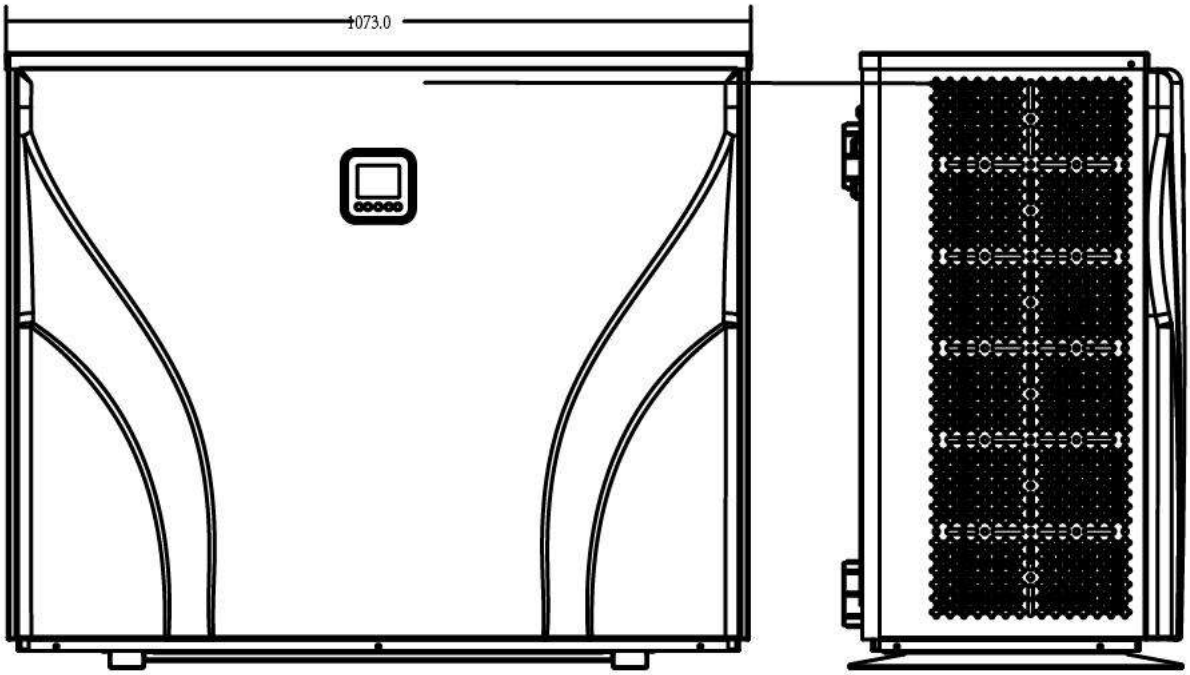

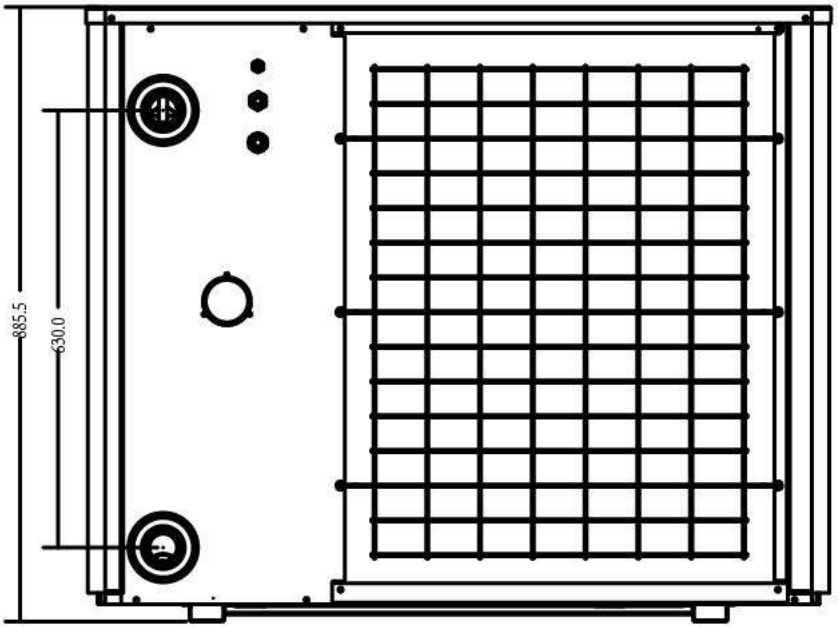

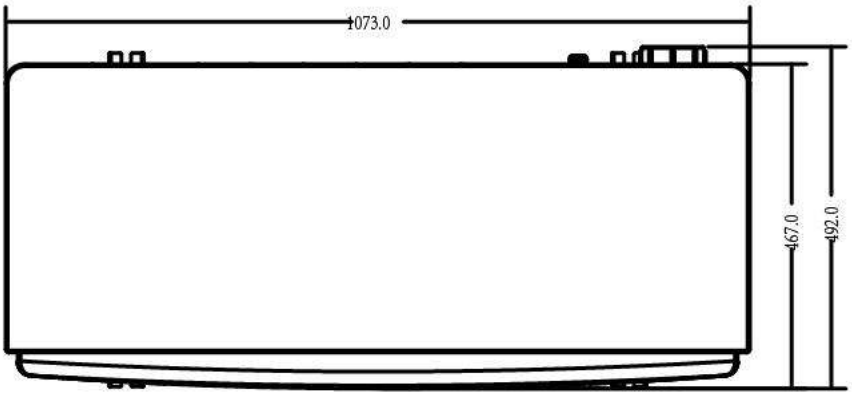

Model :UX30Csi32T/UX35Csi32T

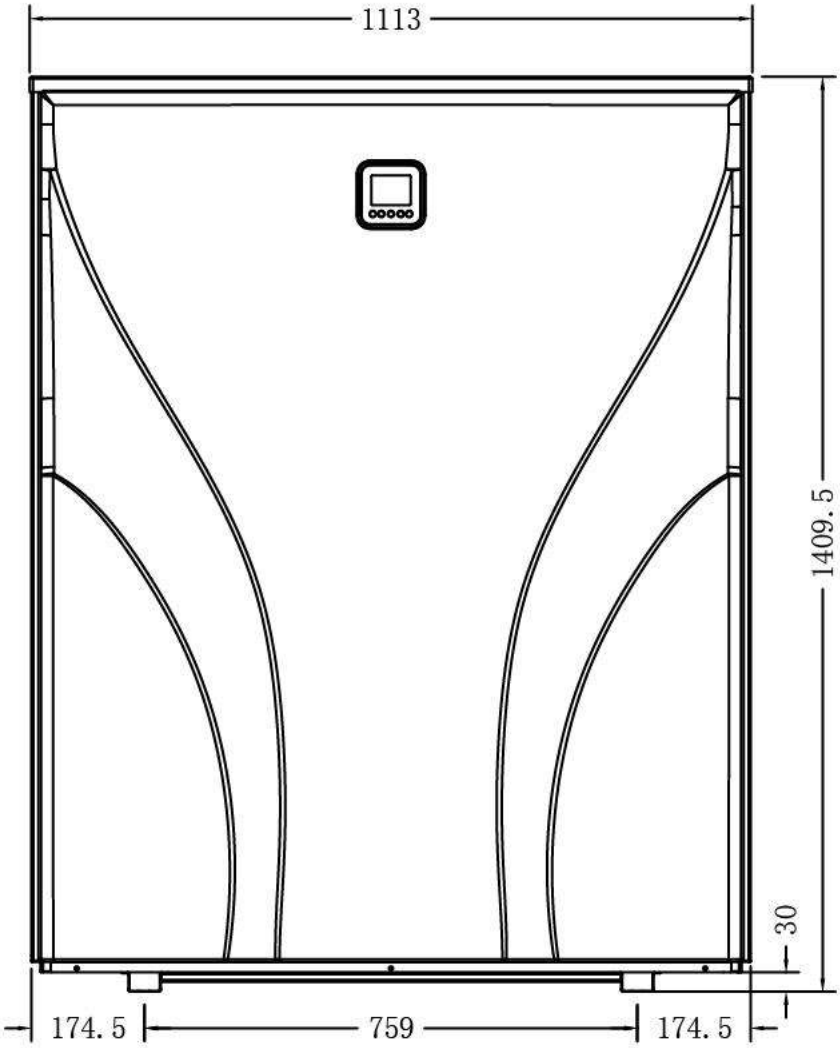

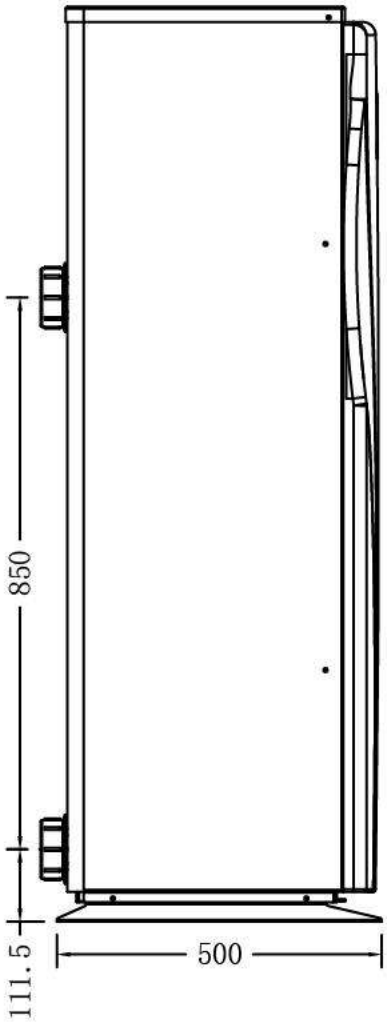

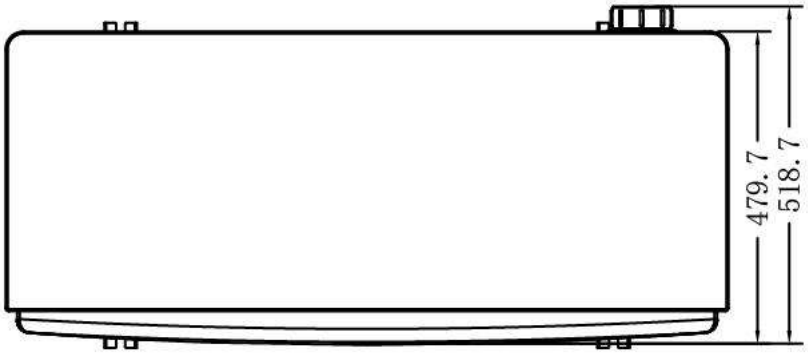

3. Installation and connection

3.1 Notes

Factory supplies only the heat pump itself. All other components, including a bypass if necessary, must be provided by the user or the installer.

Attention:

Please observe the following rules when installing the heat pump:

1. Any dosing of chemicals must take place in the piping located **downstream** from the heat pump.
2. Install a bypass in all installations.
3. Always place the heat pump on a solid foundation and use the included rubber mounts to avoid vibration and noise.
4. Always keep the heat pump upright. If the unit has been held at an angle, wait at least 24 hours before starting the heat pump.

3.2 Heat pump location

The unit will work properly in any desired location as long as the following three items are present:

1. Fresh air – 2. Electricity – 3. Swimming pool filters

The unit may be installed in virtually any **outdoor** location as long as the specified minimum distances to other objects are maintained (see drawing below). Please consult your installer for installation with an indoor pool. Installation in a windy location does not present any problem at all, unlike the situation with a gas heater (including pilot flame problems).

ATTENTION: Never install the unit in a closed room with a limited air volume in which the air expelled from the unit will be reused, or close to shrubbery that could block the air inlet. Such locations impair the continuous supply of fresh air, resulting in reduced efficiency and possibly preventing sufficient heat output. See the drawing below for minimum dimensions.

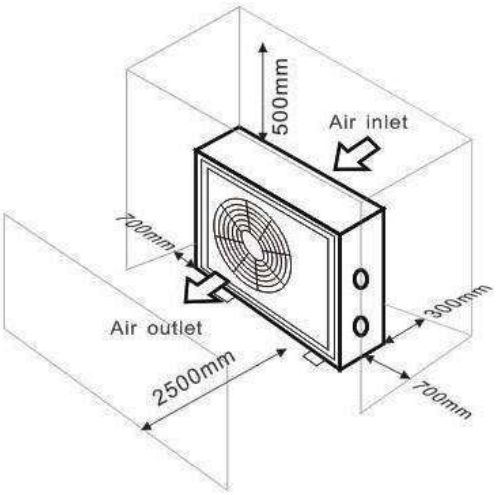

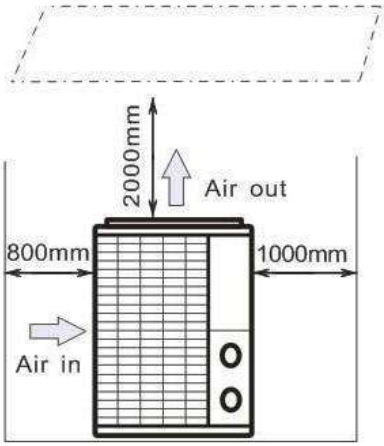

3.3 Distance from your swimming pool

The heat pump is normally installed within a perimeter area extending 7.5 m from the swimming pool. The greater the distance from the pool, the greater the heat loss in the pipes. As the pipes are mostly underground, the heat loss is low for distances up to 30 m (15 m from and to the pump; 30 m in total) unless the ground is wet or the groundwater level is high. A rough estimate of the heat loss per 30 m is 0.6 kWh (2,000 BTU) for every 5 ºC

difference between the water temperature in the pool and the temperature of the soil surrounding the pipe. This increases the operating time by 3% to 5%.

3.4 Check-valve installation

Note: If automatic dosing equipment for chlorine and acidity (pH) is used, it is essential to protect the heat pump against excessively high chemical concentrations which may corrode the heat exchanger. For this reason, equipment of this sort must always be fitted in the piping on the **downstream** side of the heat pump, and it is recommended to install a check-valve to prevent reverse flow in the absence of water circulation.

Damage to the heat pump caused by failure to observe this instruction is not covered by the warranty.

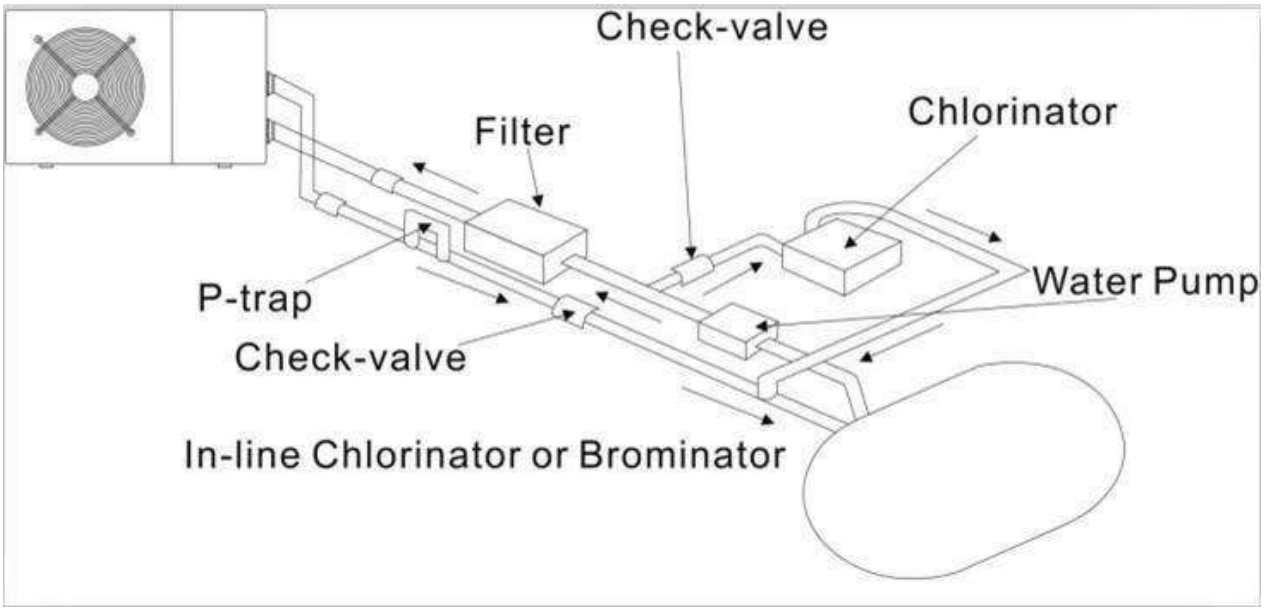

3.5 Typical arrangement

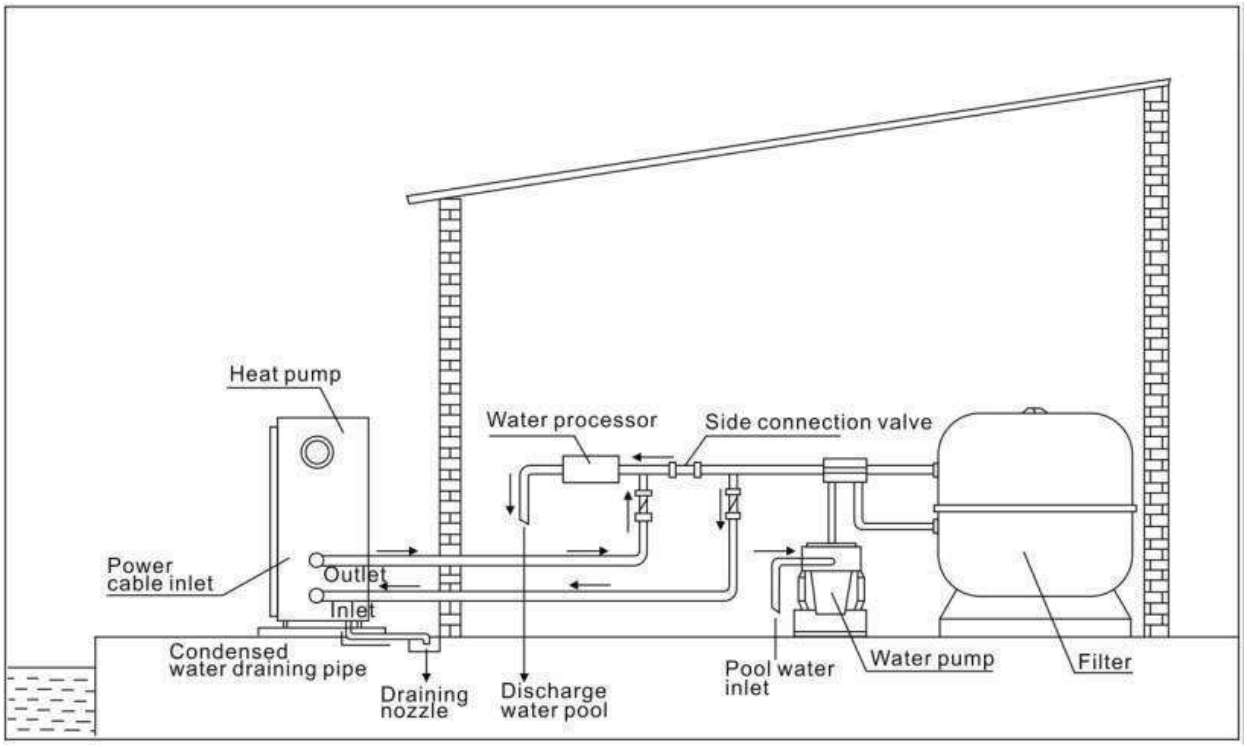

Note: This arrangement is only an illustrative example.

3.6 Adjusting the bypass

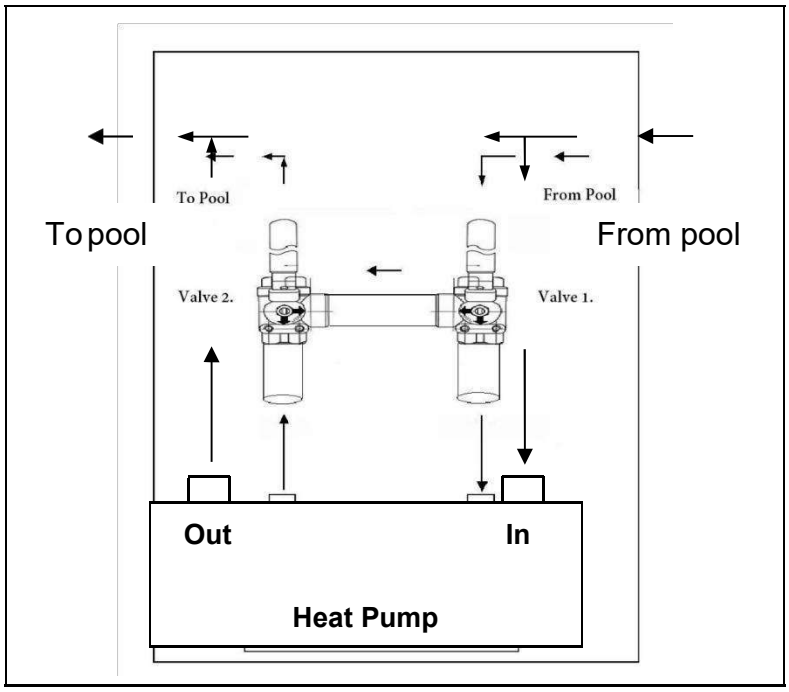

Use the following procedure to adjust the bypass:

1. Open Valve 1 & 2 half way.
2. Close valve 2 until control shows NO Or EE3 screen.
3. Slowly open Valve 2 until pool Temp shows on screen.
4. If it shows 'ON' or 'EE3' on display, it means the water flow into heat pump is not enough, then you need adjust the valves to increase the water flow through the heat pump.

Must not have Valves open Full.

How to get the optimum water flow:
Please turn on the heat pump under heating function, firstly close the by-pass then open it slowly to start the heat pump (the heat pump can't start running when the water flow is insufficient).

Continue to adjust the by-pass, at the meantime to check the Inlet water temp. & Outlet water temp, it will be optimum when the difference is around 2 degrees.

3.7 Electrical connection

Note: Although the heat pump is electrically isolated from the rest of the swimming pool system, this only prevents the flow of electrical current to, or from the water in the pool. Earthing is still required for protection against short-circuits inside the unit. Always provide a good earth connection.

Before connecting the unit, verify that the supply voltage matches the operating voltage of the heat pump. It is recommended to connect the heat pump to a circuit with its own fuse or circuit breaker and to use the appropriate wiring.
Connect the electrical wires to the terminal block marked ' POWER SUPPLY '.
A second terminal block marked 'WATER PUMP ' is located next to the first one. The filter pump (max. 5 A / 240 V) can be connected to the second terminal block here. This allows the filter pump operation to be controlled by the heat pump.

3.8 Initial operation

Note: In order to heat the water in the pool (or hot tub), the filter pump must be running to cause the water to circulate through the heat pump. The heat pump will not start up if the water is not circulating.

After all connections have been made and checked, carry out the following procedure:

1. Switch on the filter pump. Check for leaks and verify that water is flowing from and to the swimming pool.
2. Connect power to the heat pump and press the On/Off button ⏻ on the electronic control panel. The unit will start up after the time delay.
3. After a few minutes, check whether the air blowing out of the unit is cooler.

4. When the filter pump is turned off, the unit should also turn off automatically, if not, then adjust the flow switch.

Depending on the initial temperature of the water in the swimming pool and the air temperature, it may take several days to heat the water to the desired temperature. A good swimming pool cover can dramatically reduce the required length of time.

Water Flow Switch:

It is equipped with a flow switch for protecting the HP unit running with adequate water flow rate. It will turn on when the pool pump runs and shut it off when the pump shuts off. If the pool water level is higher than 1 m above or below the heat pump's automatic adjustment knob, your dealer may need to adjust its initial start-up.

Time delay - The heat pump has a built-in 3-minute start-up delay to protect the circuitry and avoid excessive contact wear. The unit will restart automatically after this time delay expires. Even a brief power interruption will trigger this time delay and prevent the unit from restarting immediately. Additional power interruptions during this delay period do not affect the 3-minute duration of the delay.

3.9 Condensation

The air drawn into the heat pump is cooled by the operation of the heat pump to heat the pool water, which may cause condensation on the fins of the evaporator. The amount of condensation may be as much as several litres per hour at high relative humidity. This is sometimes mistakenly regarded as a water leak.

3.10 Operating modes for optimal use

POWER: Used primarily at the beginning of the season because this mode allows for very rapid temperature rise.
SMART: The heat pump has completed its primary task, in this mode; the heat pump is in a position to maintain the pool water in an energy efficient manner. By automatically adjusting speed of compressor and fan the heat pump delivers a higher efficiency.
SILENT: In the summer months when the heat output is minimal required, the heat pump in this mode is even more economic. Added benefit; when the heat pump heats. It does so with minimal noise.

4. Accessories

4.1 Accessories list

 Anti-vibration base, 4 pcs	 Draining jet, 2 pcs
 Winter Cover, 1 pc	 Water drainage pipes, 2 pcs

4.2 Accessories Installation

	**Anti-vibration bases** 1. Take out 4 Anti-vibration bases 2. Put them one by one on the bottom of machine like the picture.
 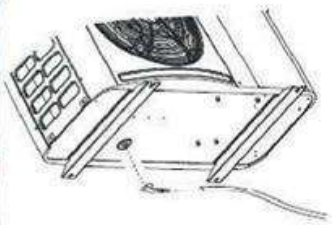	**Draining jet** 1. Install the draining jet under the bottom panel 2. Connect with a water pipe to drain out the water. Note: Lift the heat pump to install the jet. Never overturn the heat pump, it could damage the compressor.

	**Water Inlet & outlet junction** 1. Use the pipe tape to connect the water Inlet & outlet junction onto the heat pump 2. Install the two joints like the picture shows 3. Screw them onto the water Inlet & outlet junction
	**Mains Cable wiring** 1. Open the cover of the electric box inside the machine 2. Connect the cables in the correct terminal according to electric diagram.
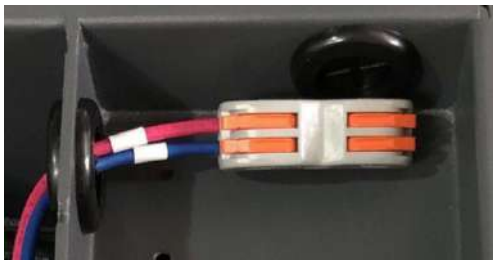	**Filtration pump wiring (Dry contact)** 1. Open the cover of the electric box inside the machine 2. Connect the cables in the correct terminal according to electric diagram.

Connection to pilot the water pump

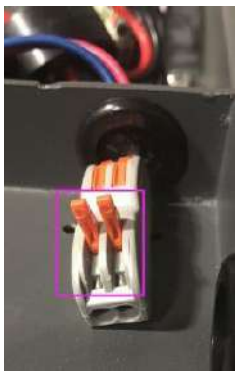		

Dry contact timer connection

Timer

Dry contact pump connection

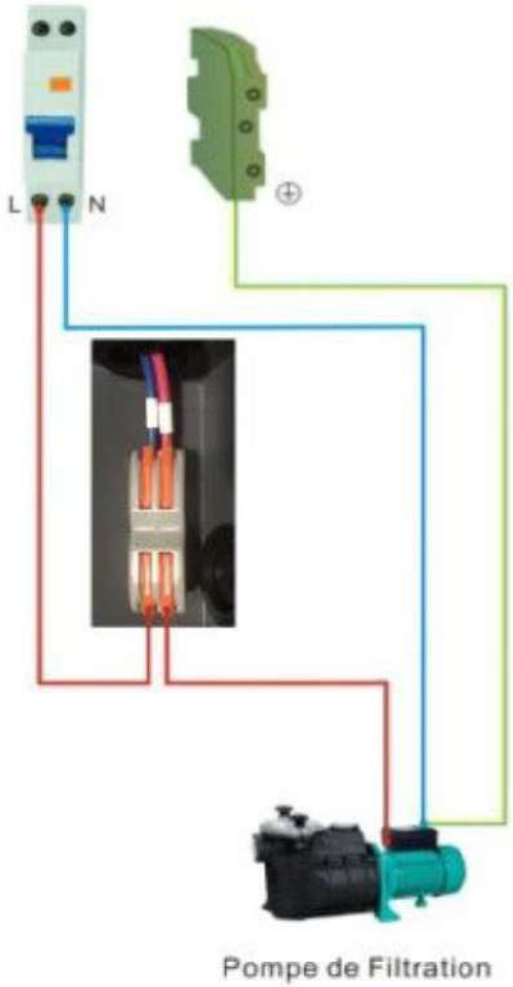

5. Electrical Wiring

5.1 SWIMMING POOL HEAT PUMP WIRING DIADRAM

UX11Csi32/UX14Csi32/UX17Csi32/UX21Csi32

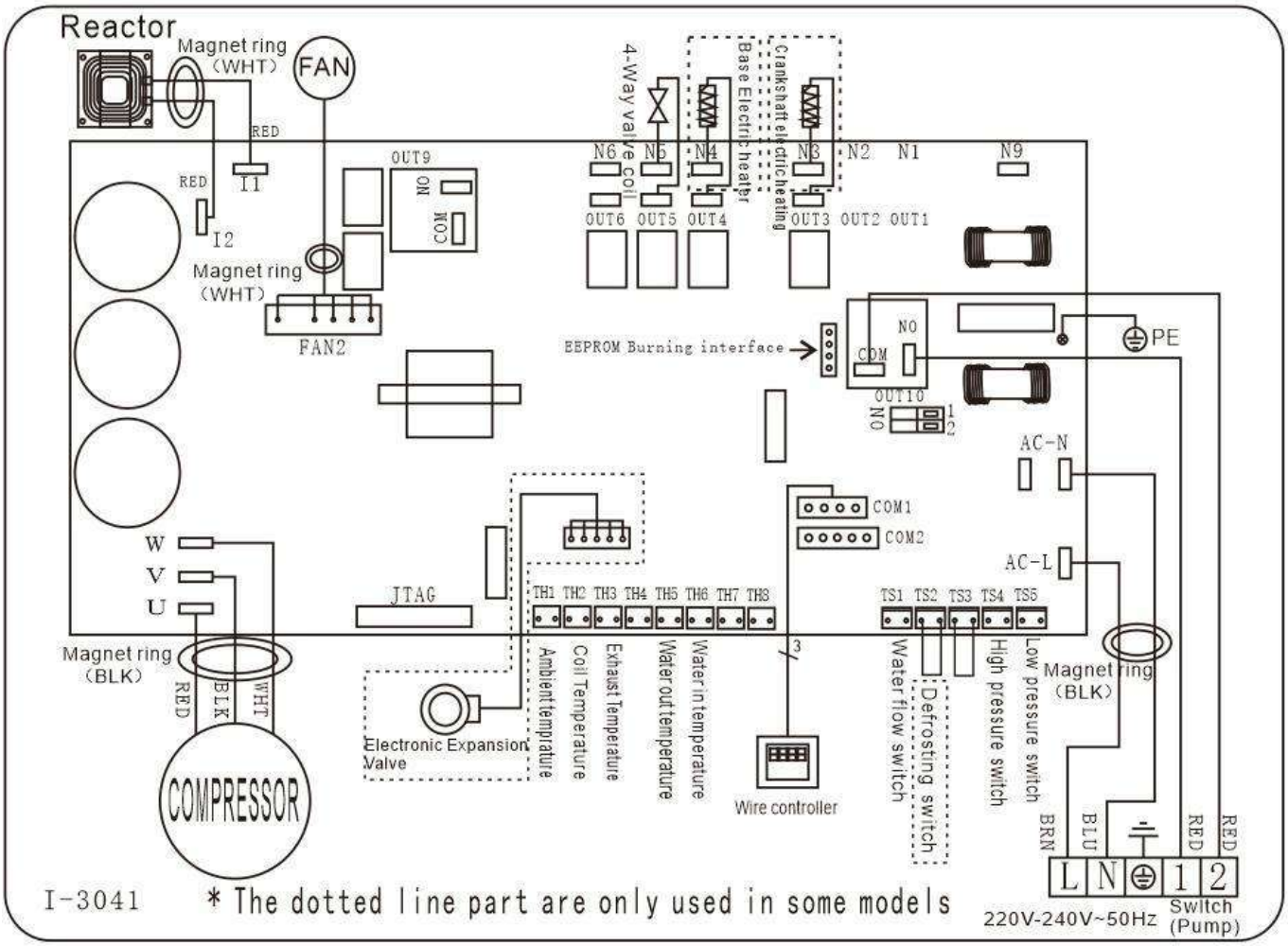

UX30Csi32T/UX35Csi32T

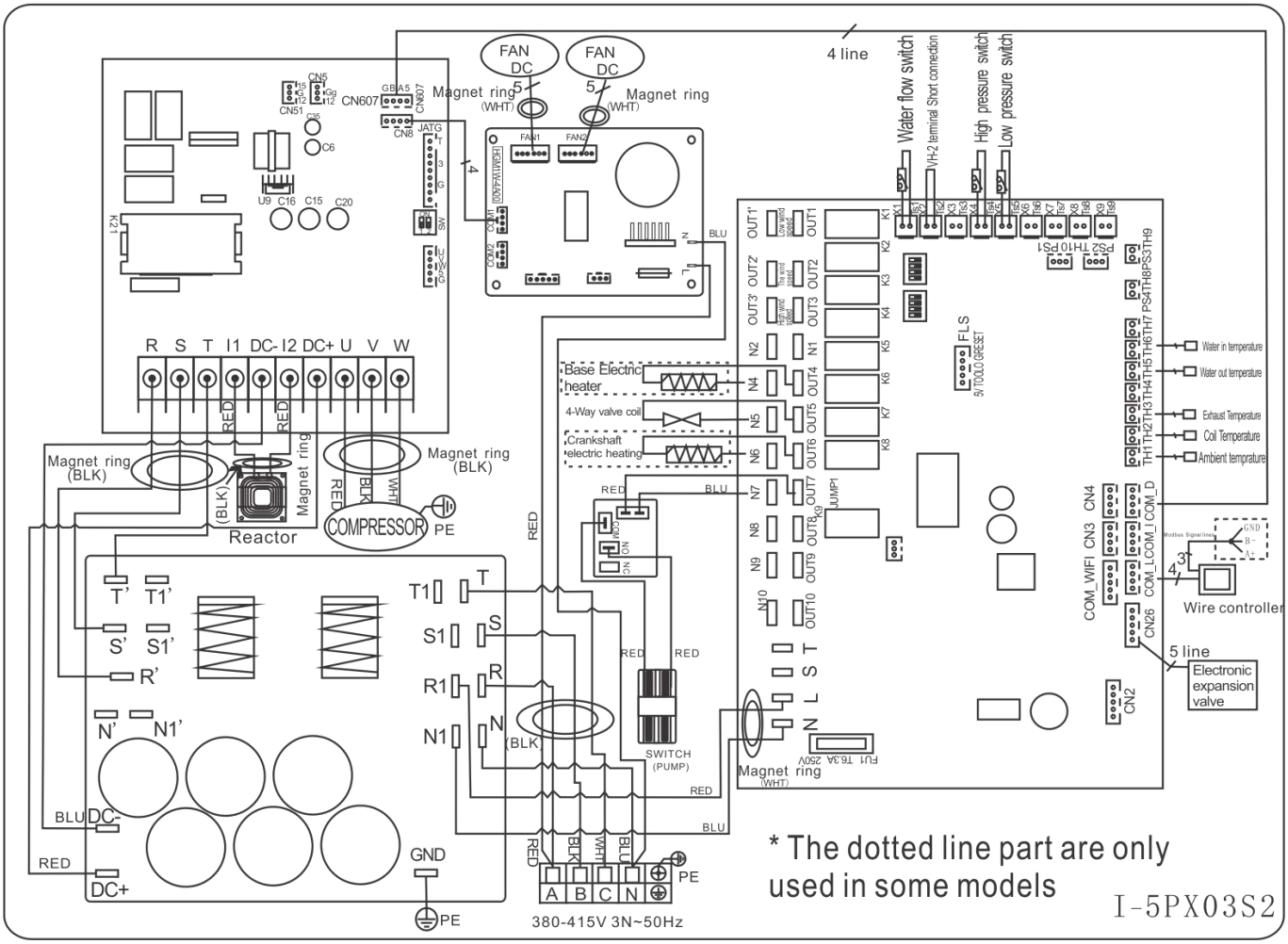

NOTE:

(1) Above electrical wiring diagram for your reference.

(2) The swimming pool heat pump must be connected earthed, although the unit heat exchanger is electrically isolated from the rest of the unit. Grounding the unit is still required to protect against short circuits inside the unit. Bonding is also required.

(3) It is recommended that your pool filtration pump and your heat pump are wired independently.

Disconnect: A disconnect means (circuit breaker, fused or un-fused switch) should be located within sight of and readily accessible from the unit. This is common practice on commercial and residential heat pumps. It prevents remotely-energizing unattended equipment and permits turning off power at the unit, while the unit is being serviced.

5.2 Installation of the display

Photo(1)

Photo(2)

Photo(3)

Photo(4)

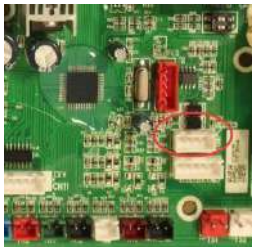

- The side with plug connects with the control panel (photo 1)
- The other side of the signal wire. (photo 2)
- Open the wiring panel and put the side without plug through the electrical box. (photo 3)
- Insert the wiring into the designated position (code:COM 1 or COM-L) on the PC board. (photo 4)

6.Display Controller Operation

6.1 Guide for operation

When the heat pump connects to the power, the display shows a code for 3 seconds which indicates the heat pump model.

6.2 The keys and their operations

6.2.1 button

Press to start the heat pump unit, the display shows the desired water temperature for 5 seconds, then shows the inlet water temperature and the operation mode.

Press to stop the heat pump unit and show “OFF”

Notice : During the parameter checking and setting, press the to quick-exit and save the current setting .

Press again to turn on/off the machine.

6.2.2 and button

Lock/unlock the display:

Hold and for 5 seconds to lock/Unlock the display.

The display will lock automatically after 30s of standby. (when the display is locked, the "locker " icon is lighted ON)

Water temperature setting:

Press or to set the water temperature directly.

Heating mode and Auto mode setting range: 6-41℃

Cooling mode setting range: 6-35℃

6.2.3  button

Press  to change the working mode, Turbo, Smart and silent .The default mode is smart mode.
While you choose the ***Turbo***, the word "**Turbo"** will be lit, the heat pump will operate in 'Full output' only.
Choose the ***Smart***, the word **"Smart"** will be lit, the heat pump will operate in 'Medium and Full output'.
Choose the ***Silent,*** the word **"Silent"** will be lit, heat pump will operate in 'Medium and Small output'.

6.2.4  button

Press  for 5S to switching the heating mode  ,cooling mode  and auto mode  .

Remark: When defrosting, the heating symbol will flash.

Operation logic of Auto Mode:

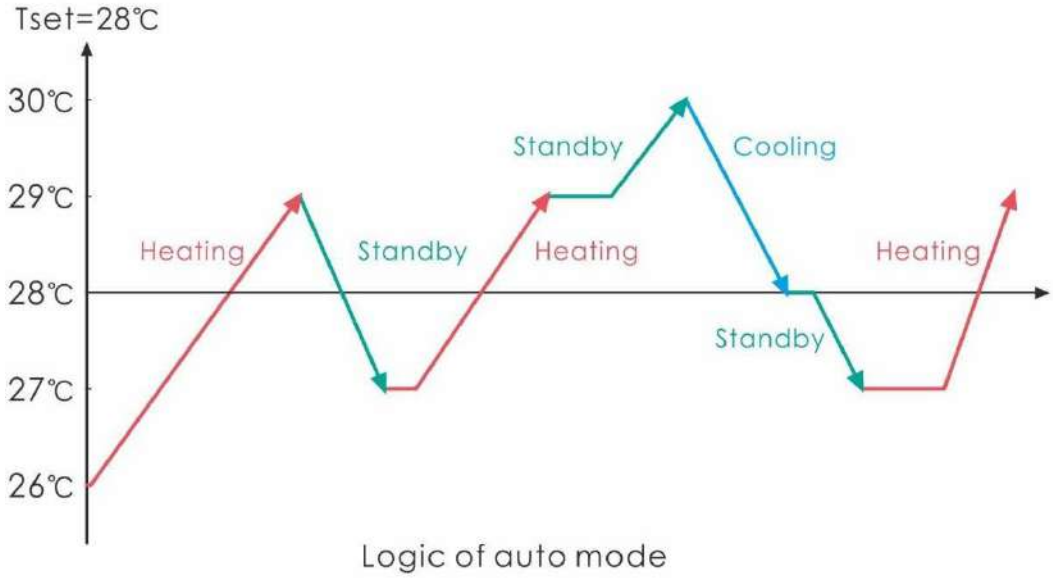

6.2.5 Parameter checking

Press  ,then press  to check d0-d11 value. 

Code	Condition	Scope	Remark
d0	IPM mould temperature	0-120℃	Real testing value
d1	Inlet water temp.	-9℃～99℃	Real testing value
d2	Outlet water temp.	-9℃～99℃	Real testing value
d3	Ambient temp.	-30℃～70℃	flash if Real value<-9

d4	Frequency limitation code	0,1,2,4,8,16	Real testing value
d5	Piping temp.	-30℃～70℃	flash if Real value<-9
d6	Gas exhaust temperature	0℃～C5℃ (125℃)	Real testing value
d7	Step of EEV	0～99	N*5
d8	Compressor running frequency	0～99Hz	Real testing value
d9	Compressor current	0～30A	Real testing value
d10	Current fan speed	0-1200 (rpm)	Real testing value
d11	Error code for last time	All error code	

Remark:
d4:Frequency limitation code,
0: No frequency limit; **1:Coil pipe temperature limit; 2: Overheating or overcooling frequency limit;**
4:Drive Current frequency limit;
8:Drive voltage frequency limit; **16:Drive high temperature frequency limit**

6.2.6 Parameter setting

Press ,then press to choose P0-P18 value ,and press again to enter the setting interface,in which parameter will flash.

Code	Name	Scope	Default	Remark
P0	Mandatory defrosting	0-1	0	0: Default normal operation 1: mandatory defrosting based on d3＜15℃
P1	Working mode	0-1	1	1: Heating mode; 0: cooling mode; 2: Auto mode
P2	Timer on/off	0-1	0	1: Timer on/off is under function; 0: Timer on/off is out of function (The setting of P5 and P6 won't work)
P3	Water pump	0-1	0	1:Always running; 0:Depends on the running of compressor
P4	Current time	HH:MM	00：00	0-23:0-59
P5	Timer on	HH:MM	00：00	0-23:0-59
P6	Timer off	HH:MM	00：00	0-23:0-59
P7	Water temp. calibration	-9～9	0	Default setting: 0
P14	Restore to factory settings	0-1	0	1-Restore to factory settings， 0- default（restore P0, P1, P2, P3, P5, P6, P7, P8, P9, 10, P11 to factory setting)
P16	Product code	/	/	Depends on the machine
P18	Mode	0-1	0	1—Heating only， 0—Heating/Cooling/Auto mode

Note:

1). Long press for 20s to set P14, P16, P18.
2). P8,P9,P10,P11,P19,P20 parameter is only for factory setting.

6.2.7 Water pump logic:

Parameter setting : P3=0 : Water pump is related to compressor's operation to start or stop.

When heat pump turns on, filtration pump will start first and then fan motor and compressor.

	Condition	**Example**	**Water pump working logic**
Heating mode	T1≥Tset-0.5 ℃, last for 30 minutes	T1≥27.5℃, last for 30 minutes	Filtration pump will enter standby mode for 1 hours and will not start except after manual power off and restart. Compressor and fan motor stops first and filtration pump will stop after 5 mins.
Cooling mode	T1≦Tset+0.5 ℃, last for 30 minutes	T1≦28.5℃, last for 30 minutes	

1 hour later	**Condition**	**Example Tset=28℃**	**Water pump working logic**
Filtration pump will start to run for 5 mins to detect the water in temp.	T1>Tset-1℃	T1>27℃	Filtration pump will enter standby mode for another **1 hours and will not start except after turning off the hp and restart.**
	T1≤Tset-1℃	T1≤27℃	Heat pump will start again until it meets the condition of standby.
	T1<Tset+1℃	T1<29℃	Filtration pump will enter standby mode for another **1 hours and will not start except after turning off the hp and restart.**
	T1≥Tset+1℃	T1≥29℃	Heat pump will start again until it meets the condition of standby.

Note: If the water volume of the swimming pool is small, water temp reaches T1≥Tset+1℃ and last for 5 mins, heat pump will stop first and then filtration pump stops, but it will not entry standby mode for 1 hour.
If water temp drops to T1≤Tset-1, heat pump will start again.

While P3=1: When the heat pump is on (running or standby), filtration pump will always be on.

NOTE :
Tset = Tseting water temperature
For example : Tset = 28℃ Tseting water temperature in your pool heat pump
Tset-1 = less 1℃ than Tseting temperature
Tset- 1 = 28-1=27℃
Tset+1= more 1℃ than Tseting temperature
Tset+ 1 = 28+1=29℃

7.Troubleshooting

7.1 Error code display on wire controller

Malfunction	Error code	Reason	Solution
Inlet water temperature sensor failure d1-TH6	PP01	1. The sensor in open or short circuit 2. The wiring of sensor is loose	1. Check or change the sensor 2.Re-fix the wiring of the sensors
Outlet water temperature sensor failure d2-TH5	PP02	1. The sensor in open or short circuit 2. The wiring of sensor is loose	1. Check or change the sensor 2.Re-fix the wiring of the sensors
Heating piping sensor failure d5-TH2	PP03	1. The sensor in open or short circuit 2. The wiring of sensor is loose	1. Check or change the sensor 2.Re-fix the wiring of the sensors
Ambient temperature sensor failure d3-TH1	PP05	1. The sensor in open or short circuit 2. The wiring of sensor is loose	1. Check or change the sensor 2.Re-fix the wiring of the sensors
Exhaust piping sensor failure d6-TH3	PP06	1. The sensor in open or short circuit 2. The wiring of sensor is loose	1. Check or change the sensor 2.Re-fix the wiring of the sensors
Antifreeze protection in Winter	PP07	Ambient temperature or water inlet temperature is too low	1. Check the d1((inlet water temp.) and d3(outlet water temp.) 2. Normal protection
Low ambient temperature protection	PP08	1. Out of the normal operating ambient temperature for this machine by checking d3 2. Sensor abnormality d3-TH1	1. Stop using, beyond the scope of using 2.Change the sensor
Piping temperature too high protection under cooling mode d5-TH2	PP10	1. Ambient or the water temperature is too high in cooling mode 2. Refrigeration system is abnormal 3. Pipe temperature sensor(d5-TH2) failure	1. Check the ambient temperature 2. Check refrigeration system 3. Change the pipe temperature sensor (d5-TH2)
Over low protection for outlet water temperature in cooling mode d2-TH5	PP11	1. Low water flow 2. Outlet water temperature sensor d2-TH5 abnormal 3. The difference of outlet water temperature and set temperature is 7℃ or above in cooling mode	1. Check filtration pump and waterway system 2. Change outlet water temperature sensor d2-TH5 3. Change the set temperature.
High pressure failure TS4	EE01	1. Ambient temperature is too high 2. Water temperature is too high 3. Water flow is too low 4. Fan motor speed is abnormal or fan motor is damaged under cooling mode 5. Gas system jammed 6. High pressure wire is loose or damaged 7. Too much refrigerant	1. Choose the silent mode. 2. Check the water flow or filtration pump 3. Check the fan motor under cooling mode, replace a new one if it is abnormal. 4. Check and repair the refrigerating system 5. Reconnect the high pressure wire or replace a new high pressure switch 6. Check and repair the refrigerating system

Malfunction	Error code	Reason	Solution
Low pressure failure TS5	EE02	1. EEV has blocked or pipe system is jammed 2. Fan motor speed is abnormal or fan motor is damaged under heating mode 3. Gas leakage 4. Low pressure wire is loose or damaged	1. Check the EEV and piping system 2. Check the fan motor under heating mode, replace a new one if it is abnormal 3. Check refrigeration system or check the pressure value through the high-pressure gauge. 4. Reconnect the low pressure wire or replace a new low pressure switch
Water flow failure TS1	EE03 Or "ON"	1. The wiring of water flow switch is loose or water flow switch damaged 2. No/Insufficient water flow.	1. Check the wiring of water flow switch or change a new one. 2. Check the filtration pump or the waterway system if there is air or jammed inside
Over heating protection for water temperature (d2- TH5) in heating mode	EE04	1. Low water flow 2. Water flow switch is stuck and the water supply stops 3. d2- TH5 outlet water temperature sensor is abnormal 4. The difference of outlet water temperature and set temperature is 7℃ or above in heating mode	1. Check the water flow switch if it works well 2. Check the filtration pump or the waterway system if there is air or jammed inside 3. Check d2- TH5 outlet water temperature sensor or replace a new one. 4. Change the set temperature.
d6-TH3 Exhaust too high protection	EE05	1. Lack of gas 2. Low water flow 3. Piping system has been blocked 4. Exhaust temp. sensor failure d6-TH3 5. Ambient temperature is too high	1. Check the pressure gauge, and fill with some gas if it is lack of gas 2. Check the filtration pump or the waterway system if there is air or jammed inside 3. Check the piping system if there was any block 4. Change a new exhaust temp. sensor d6-TH3 5. Check whether the current ambient temp. and water temp. are beyond the running temp. of the machine
Controller failure	EE06	1. Signal is not well connected or damaged 2. Controller failure	1. Stop the power supply and restart. 2. Re-connect the signal wire or replace a new one 3. Replace a new controller

Malfunction	Error code	Reason	Solution
Compressor current protection	EE07	1. The compressor current is too large instantaneously 2. Wrong connection for compressor phase sequence 3. Compressor accumulations of liquid and oil lead to the current becomes larger 4. Compressor or driver board damaged 5. The water flow is abnormal 6. Power fluctuations within a short time	1. Check if the power in the normal range 2. Check the compressor 3. Check the compressor phase 4. Check the phase sequence connection 5. Check the waterway system and filtration pump 6. Check mains power input
Communication failure between controller and main board	EE08	1. Signal wire is not well connected or damaged 2. Controller failure 3. Driving failure	1. Stop the power supply and restart. Re-connect the signal wire or replace a new one 2. Check the controller or replace a new one 3. Check the driving system or update it.
Communication failure between Main control board and Driving board	EE09	1. Poor connection of communication wire 2. PCB failure 3. The wire is damaged	1. Stop the power supply and restart. 2. Reconnect the communication wire or replace a new one 3. Check the wirings according to the electric diagram 4. Replace a new PCB
VDC voltage too high protection	EE10	1. Line voltage is too high 2. Driver board is damaged.	1. Check whether the power supply is normal 2. Change driver board or main board
IPM module protection	EE11	1. Data mistake 2. Wrong compressor phase connection 3. Compressor liquid and oil accumulation lead to the current becomes larger 4.Poor heat dissipation of drive module or high ambient temperature 5. Compressor or driver board damaged	1. Program error, turn off electricity supply and restart after 3 minutes 2. Check compressor sequence connection 3. Check the pressure of system by pressure gauge 4. Check if the ambient and water temperature is over high 5. If it is the refrigration system failure, send it to the service center 6. Change driver board
VDC voltage too low protection	EE12	1. Mother line voltage is too low 2. Driver board is damaged.	1. Check if the power supply is in the normal range 2. Change driver board

Malfunction	Error code	Reason	Solution
Input current over high protection.	EE13	1. The compressor current is too large momentary 2. The water flow is abnormal 3. Power fluctuations within a short time 4. Wrong reactor	1. Check the compressor if it works normally 2. Check the waterway system 3. Check if the power is in the normal range 4. Check if the reactor is used correctly.
IPM module thermal circuit is abnormal	EE14	1. Output abnormity of IPM module thermal circuit 2. Fan motor is abnormal or damaged 3. Fan blade is broken	1. Check if the motor speed is too low or fan motor is damaged, replace it by a new one. 2. Replace a new driver board 3. Change the fan blade if it is broken
IPM module temperature too high protection	EE15	1. Output exception of IPM module thermal circuit 2. Fan motor is abnormal or damaged 3. Fan blade is broken 4.The screw on driver board is loose	1. Check the main board or replace the driver board 2. Check if the motor speed is too low or fan motor is damaged, replace it by a new one if any failure. 3. Change the fan blade if it is broken 4. Check the screw on driver board
PFC module protection	EE16	1. Output exception of PFC module 2. Fan motor is abnormal or damaged 3. Fan blade is broken 4. Input voltage leap, input power is abnormal	1. Check the main board or replace the driver board 2. Check if the motor speed is too low or fan motor is damaged, replace it by a new one. 3. Change the fan blade 4. Check the input voltage
DC fan motor failure	EE17	1. DC motor is damaged 2. For the tri-phase check if the neutral is connected 3. Main board is damaged 4. The fan blade is stuck	1. Detect DC motor for mono phase machine, replace a new one if any failure 2. Check the wiring connection for tri-phase machine 3. Check the board, replace a new driver board or main board if any failure 4. Check if there is any barrier in front of fan blade and remove it
PFC module thermal circuit is abnormal	EE18	The driver board is damaged	1. Check if the motor speed is too low or fan motor is damaged, replace it by a new one. 2. Change a new driver board

Malfunction	Error code	Reason	Solution
PFC module high temperature protection	EE19	1. PFC module thermal circuit output abnormal 2. Fan motor is abnormal or damaged 3. Fan blade is broken 4. The screw in the driver board is not tight	1. Check the main board or replace the driver board 2. Check if the motor speed is too low or fan motor is damaged, replace it by a new one if any failure. 3. Change the fan blade if it is broken 4. Check the screw on driver board
Input power failure	EE20	The supply voltage fluctuates too much	Check whether the voltage is stable
Software control exception	EE21	1. Compressor runs out of step 2. Wrong program 3. Impurity inside compressor causes the unstable rotate speed	1. Check the main board or change a new one 2. Update the correct program 3. Check the refrigeration system
Current detection circuit failure	EE22	1. Voltage signal abnormal 2. Driver board is damaged 3. Main board failure	1. Change a new main board 2. Change a new driver board
Compressor start failure	EE23	1. Main board is damaged 2. Compressor wiring error or poor contact or unconnected 3. Liquid accumulation inside 4. Wrong phase connection for compressor	1. Check the main board or change a new one 2. Check the compressor wiring according to the circuit diagram 3. Check the compressor or change a new one
Ambient Temperature device failure on Driver board	EE24	Ambient Temperature device failure	Change driver board or main board
Compressor phase failure	EE25	Compressors U, V, W are just connected to one phase or two phases.	Check the actual wiring according to the circuit diagram
Four-way valve reversal failure	EE26	1. Four-way valve reversal failure 2. Lack of refrigerant (no detect when d5-TH2 or d3-TH1 malfunction)	1. Switch to Cooling mode to check the 4-way valve if it has been reversed correctly 2. Change a new 4-way valve 3. Fill with gas
EEPROM data read malfunction	EE27	1. Wrong EEPROM data in the program or failed input of EEPROM data 2. Main board failure	1. Re-enter correct EEPROM data 2. Change a new main board
The inter-chip communication failure on the main control board	EE28	Main board failure	1. Stop electricity supply and restart it 2. Change a new main board

Remarks:

1. In heating mode, if the water out temperature is higher than the set temperature over 7℃, LED controller displays EE04 for water over-heating protection.
2. In cooling mode, if the water out temperature is lower than the set temperature over 7℃, LED controller displays PP11 for water over-cooling protection.

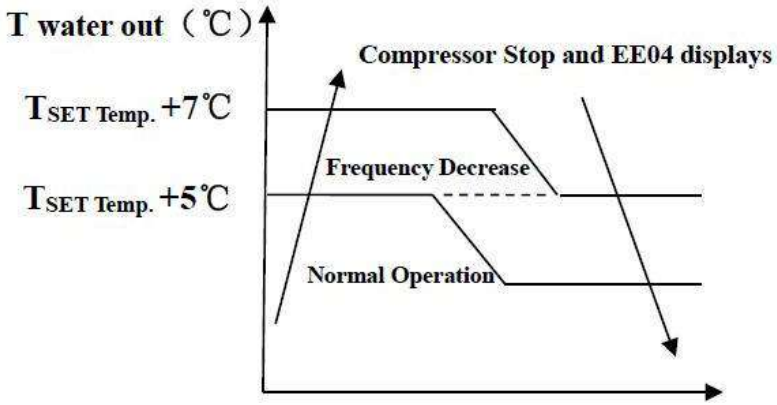

EE04 Water Overheating Protection

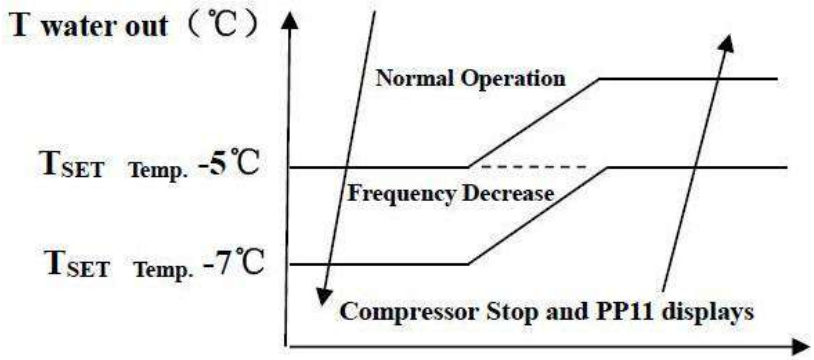

PP11 Water Overcooling Protection

For example as below:

Mode	Output water temperature	Set point temperature	Condition	Malfunction
Heating mode	**36**℃	**29**℃	Tout -Tset ≧**7**℃	EE04 Overheating protection for water temperature (d2-TH5)
Cooling mode	**23**℃	**30**℃	Tset -Tout ≧**7**℃	PP11 Too low protection for water temperature (d2- TH5)

7.2 Other Malfunctions and Solutions (No display on LED wire controller)

Malfunctions	Observing	Reasons	Solution
Heat pump is not running	LED wire controller no display.	No power supply	Check cable and circuit breaker if it is connected
	LED wire controller. Displays the actual time.	Heat pump under standby status	Startup heat pump to run.
	LED wire controller displays the actual water temperature.	1. Water temperature is reaching to setting value, HP under constant temperature status. 2. Heat pump just starts to run. 3. Under defrosting.	1. Verify water temperature setting. 2. Startup heat pump after a few minutes. 3. LED wire controller should display "Defrosting".
Water temperature is cooling when HP runs under heating mode	LED wire controller displays actual water temperature and no error code displays.	1. Choose the wrong mode. 2. Figures show defects. 3. Controller defect.	1. Adjust the mode to proper running 2. Replace the defect LED wire controller, and then check the status after changing the running mode, verifying the water inlet and outlet temperature. 3. Replace or repair the heat pump unit
Short running	LED displays actual water temperature, no error code displays.	1. Fan NO running. 2. Air ventilation is not enough. 3. Refrigerant is not enough.	1. Check the cable connections between the motor and fan, if necessary, it should be replaced. 2. Check the location of heat pump unit, and eliminate all obstacles to make good air ventilation. 3 Replace or repair the heat pump unit.
Water stains	Water stains on heat pump unit.	1. Concreting. 2. Water leakage.	1. No action. 2. Check the titanium heat exchanger carefully if it is any defect.
Too much ice on evaporator	Too much ice on evaporator.		1. Check the location of heat pump unit, and eliminate all obstacles to make good air ventilation. 2. Replace or repair the heat pump unit.

8.Exploded Diagram

Model： UX11Csi32/UX14Csi32

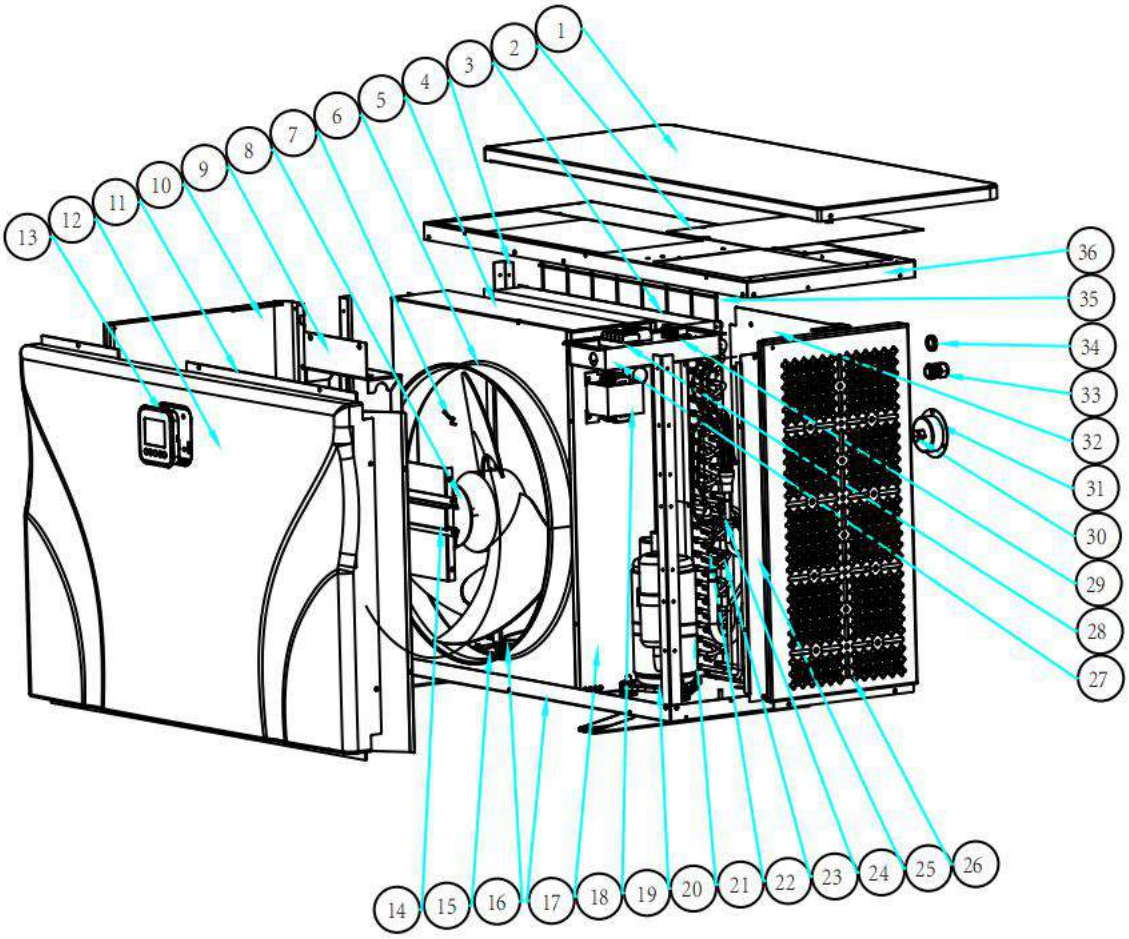

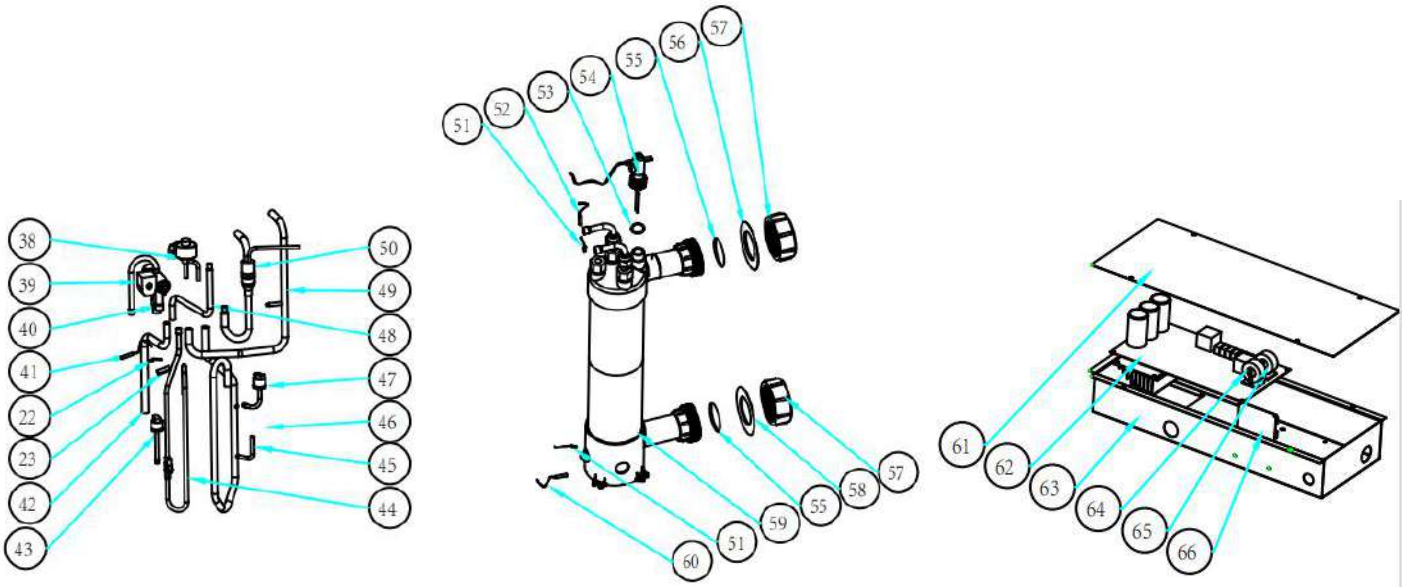

UX11Csi32/UX14Csi32

NO	Spare parts list	NO	Spare parts list
1	Top cover	34	Cable passing hole
2	Service panel	35	Back grill
3	Evaporator	36	Top frame
4	Pillar	37	/
5	Fan panel	38	EEV
6	Ambient temp. sensor T5-TH1	39	4 way valve coil
7	Fan blade	40	4 way valve
8	Fan motor	41	Evaporator temperature sensor T3-TH2
9	Fan motor bracket	42	4-way valve to evaporator piping
10	Left panel	43	High pressure switch
11	Service panel	44	Discharge pipe
12	Front panel	45	Gas return piping
13	Controller	46	Seal tube
14	Pillar	47	Low pressure switch
15	Evaporator support panel	48	EEV to distribution piping
16	Evaporator heating resistor	49	4-way valve to exchanger
17	Base tray	50	Exchanger to EEV
18	Isolation panel	51	Exchanger temperature sensor clip
19	Reactor	52	Water outlet temp. sensor T2-TH5
20	Compressor	53	Rubber ring on water flow switch
21	Compressor heating resistor	54	Water flow switch
22	Sensor clip	55	PVC cover
23	Sensor holder	56	Red rubber ring
24	Discharge temp. sensor T6-TH3	57	Water connection sets
25	Service panel	58	Red rubber ring
26	Right panel	59	Titanium heat exchanger
27	Terminal board	60	Water inlet temp. sensor T1-TH6
28	Power terminal	61	Electric box cover
29	Clip	62	PCB
30	Screw	63	Electric box
31	Pressure gauge	64	Magnet ring
32	Back panel	65	Magnet ring
33	Cable connector	66	Wifi module

Model： UX17Csi32/UX21Csi32

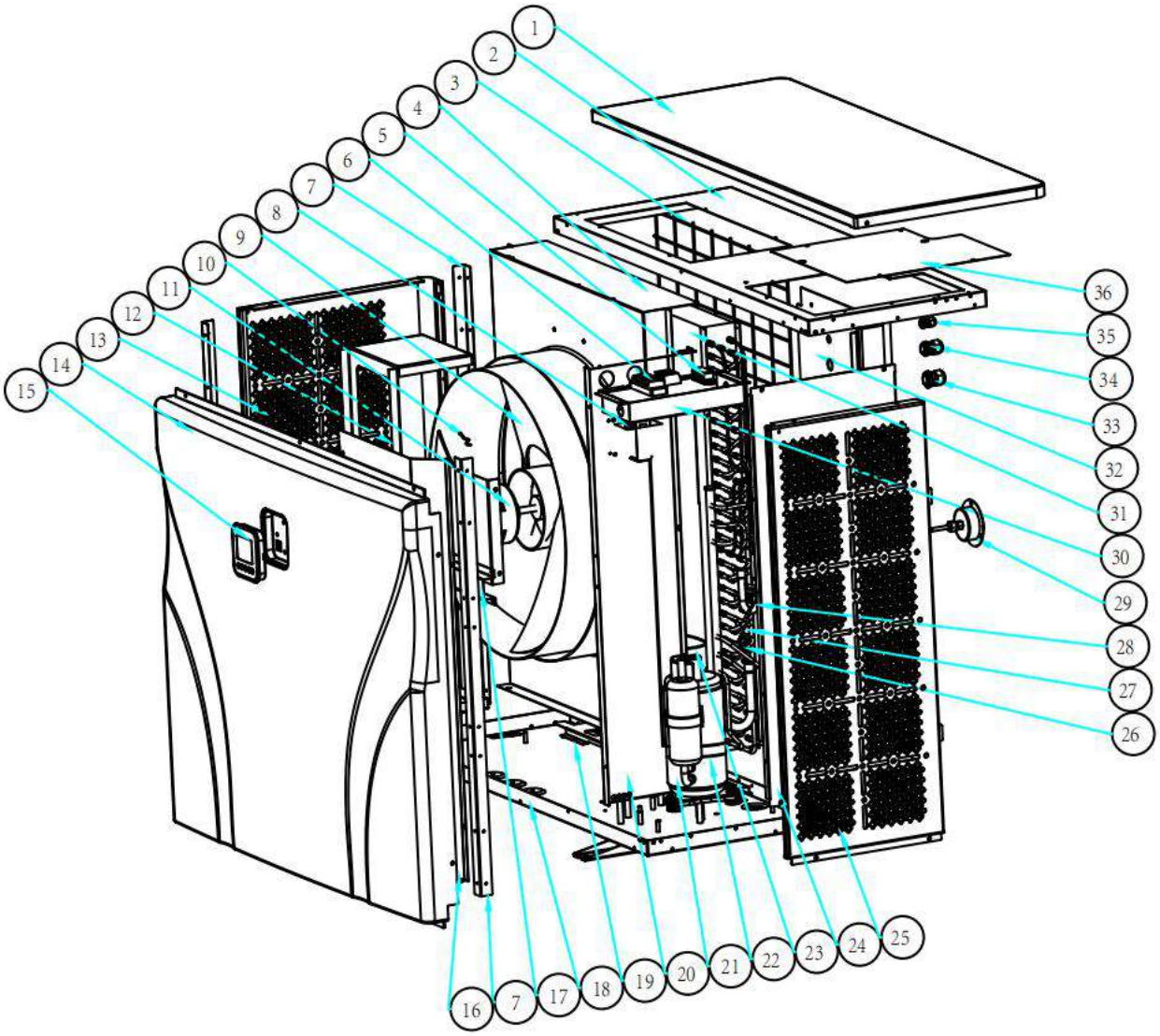

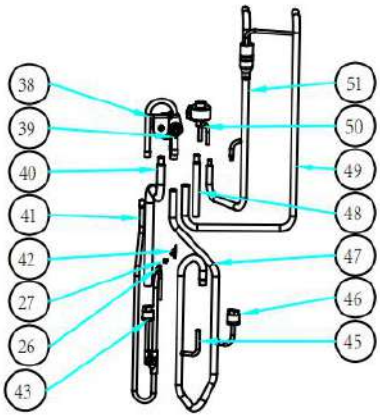

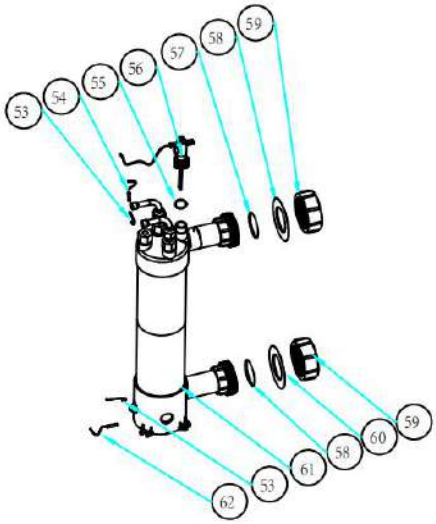

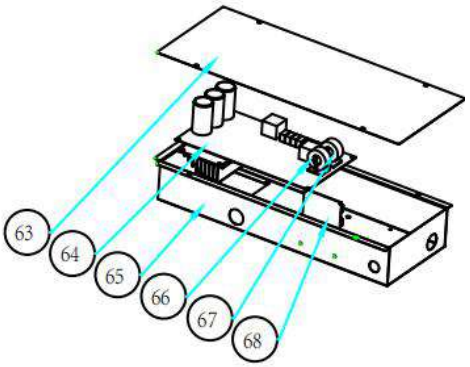

UX17Csi32

NO	Spare parts list	NO	Spare parts list
1	Top cover	35	Cable connector
2	Top frame	36	Service panel
3	Back grill	37	/
4	Fan panel	38	4 way valve coil
5	Clip	39	4 way valve
6	Power terminal	40	4-way valve to evaporator piping
7	Pillar	41	Discharge pipe
8	Reactor	42	Evaporator temperature sensor T3-TH2
9	Fan blade	43	High pressure switch
10	Fan motor	44	/
11	Ambient temp. sensor T5-TH1	45	Seal tube
12	Fan motor bracket	46	Low pressure switch
13	Left panel	47	Gas return piping
14	Front panel	48	EEV to distribution piping
15	Controller	49	4-way valve to exchanger
16	Service panel	50	EEV
17	Pillar	51	Exchanger to EEV
18	Base tray	52	/
19	Evaporator support panel	53	Exchanger temperature sensor clip
20	Isolation panel	54	Water outlet temp. sensor T2-TH5
21	Compressor	55	Rubber ring on water flow switch
22	Compressor heating resistor	56	Water flow switch
23	Evaporator heating resistor	57	PVC cover
24	Service panel	58	Red rubber ring
25	Right panel	59	Water connection sets
26	Sensor holder	60	Blue rubber ring
27	Clip	61	Titanium heat exchanger
28	Discharge temp. sensor T6-TH3	62	Water inlet temp. sensor T1-TH6
29	Pressure gauge	63	Electric box cover
30	Terminal board	64	PCB
31	Evaporator	65	Electric box
32	Back panel	66	Magnet ring
33	Cable connector	67	Magnet ring
34	Cable connector	68	Wifi module

UX21Csi32

NO	Spare parts list	NO	Spare parts list
1	Top cover	35	Cable connector
2	Top frame	36	Service panel
3	Back grill	37	4 way valve
4	Fan panel	38	4 way valve coil
5	Clip	39	EEV
6	Power terminal	40	EEV to distribution piping
7	Pillar	41	4-way valve to evaporator piping
8	Reactor	42	High pressure switch
9	Fan blade	43	Evaporator temperature sensor T3-TH2
10	Fan motor	44	Discharge pipe
11	Ambient temp. sensor T5-TH1	45	Liquid storage tank
12	Fan motor bracket	46	Gas return piping
13	Left panel	47	Filter to storage tank
14	Front panel	48	Low pressure switch
15	Controller	49	Liquid storage tank to EEV
16	Service panel	50	4-way valve to exchanger
17	Pillar	51	Dehydrator filter
18	Base tray	52	Exchanger to filter
19	Evaporator support panel	53	Exchanger temperature sensor clip
20	Isolation panel	54	Water outlet temp. sensor T2-TH5
21	Compressor	55	Rubber ring on water flow switch
22	Compressor heating resistor	56	Water flow switch
23	Evaporator heating resistor	57	PVC cover
24	Service panel	58	Red rubber ring
25	Right panel	59	Water connection sets
26	Sensor holder	60	Blue rubber ring
27	Clip	61	Titanium heat exchanger
28	Discharge temp. sensor T6-TH3	62	Water inlet temp. sensor T1-TH6
29	Pressure gauge	63	Electric box cover
30	Terminal board	64	PCB
31	Evaporator	65	Electric box
32	Back panel	66	Magnet ring
33	Cable connector	67	Magnet ring
34	Cable connector	68	Wifi module

Model： UX30Csi32T/UX35Csi32T

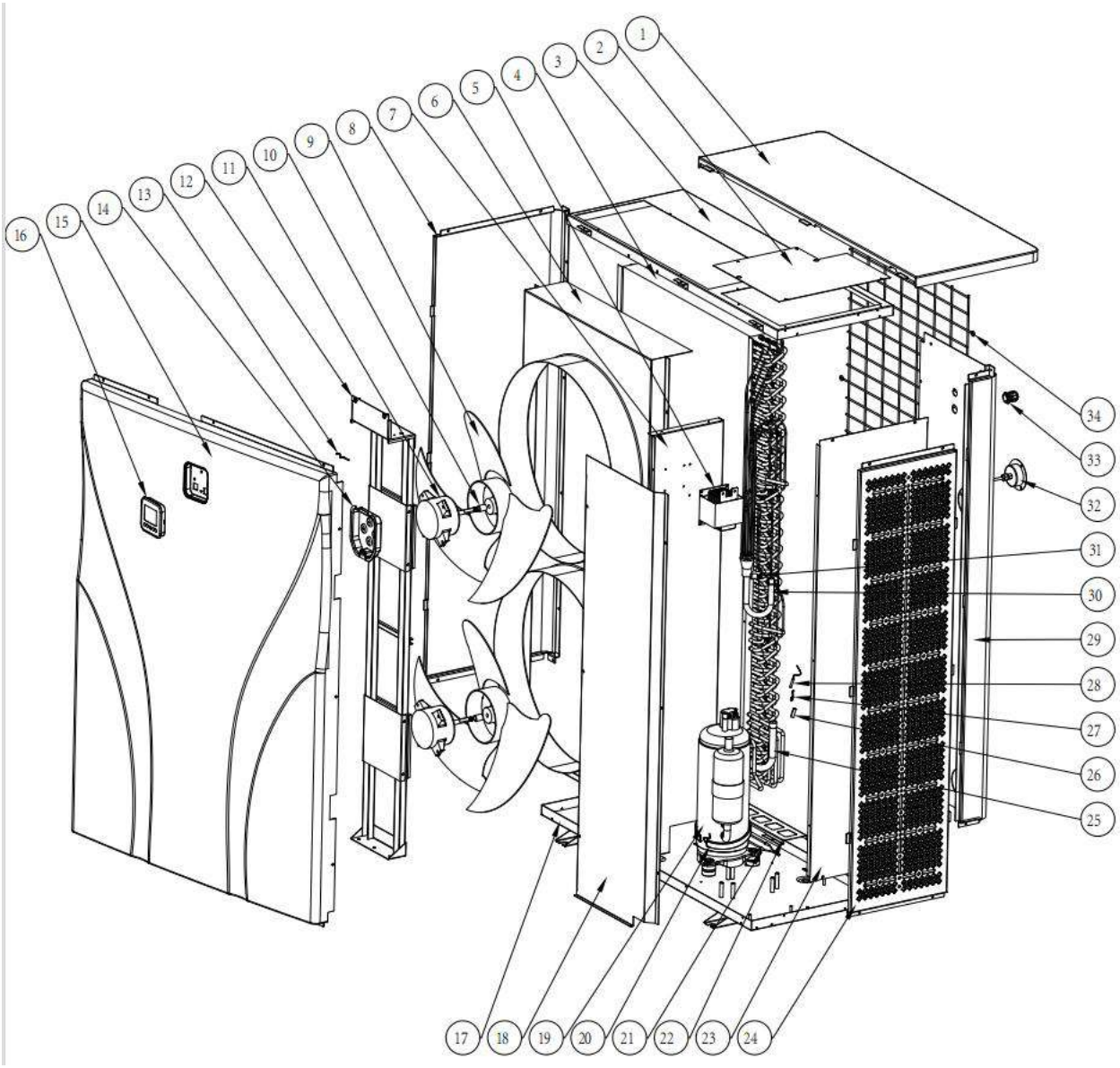

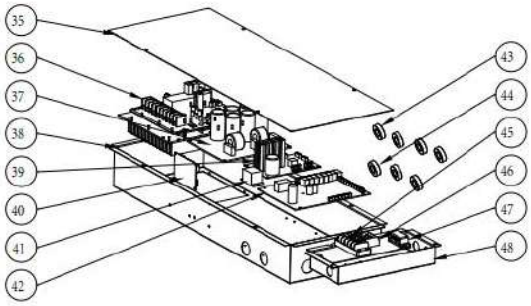

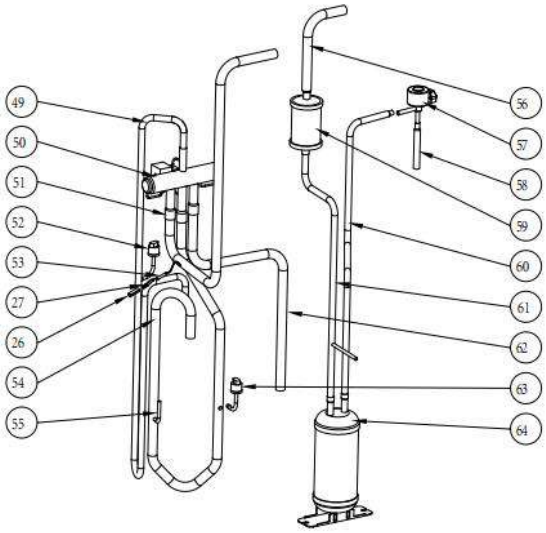

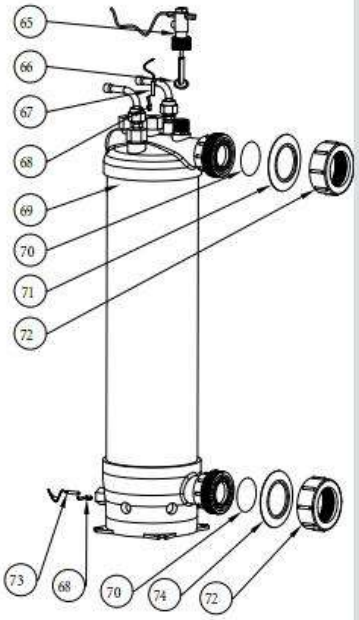

NO	Spare parts list	NO	Spare parts list
1	Top cover	38	Electric box
2	Service panel	39	/
3	Top frame	40	Wifi module
4	Evaporator	41	Relay
5	Reactor	42	PCB
6	Fan panel	43	Magnet ring
7	Isolation panel	44	Magnet ring
8	Left panel	45	Power terminal
9	Fan blade	46	Power terminal
10	Fan motor assemble	47	Clip
11	Fan motor	48	Terminal board
12	Fan motor bracket	49	Discharge pipe
13	Ambient temp. sensor T5-TH1	50	4 way valve
14	Controller installation box	51	4-way valve to exchanger
15	Front panel	52	High pressure switch
16	Controller	53	Discharge temp. sensor T6-TH3
17	Base tray	54	Gas return piping
18	Service panel	55	Seal tube
19	Compressor	56	Exchanger to filter
20	Compressor heating resistor	57	EEV
21	Evaporator heating resistor	58	EEV to distribution piping
22	Evaporator support panel	59	Dehydrator filter
23	Service panel	60	Liquid storage tank to EEV
24	Right panel	61	Filter to storage tank
25	Evaporator pipe	62	4-way valve to evaporator piping
26	Sensor holder	63	Low pressure switch
27	Sensor clip	64	Liquid storage tank
28	Evaporator temperature sensor T3-TH2	65	Water flow switch
29	Back panel	66	Rubber ring on water flow switch
30	Distribution piping	67	Water outlet temp. sensor T2-TH5
31	Rubber block	68	Exchanger temperature sensor clip
32	Pressure gauge	69	Titanium heat exchanger
33	Cable connector	70	Rubber ring on water connection
34	Back grill	71	Red rubber ring
35	Electric box cover	72	Water connection sets
36	Driver board 3 phase	73	Water inlet temp. sensor T1-TH6
37	Filter board	74	Blue rubber ring

9. Maintenance

(1) You should check the water supply system regularly to avoid the air entering the system and occurrence of low water flow, because it would reduce the performance and reliability of HP unit.

(2) Clean your pools and filtrationsystem regularly to avoid the damage of the unit as a result of the dirty of clogged filter.

(3) You should discharge the water from bottom of water pump if HP unit will stop running for a long time (specially during the winter season).

(4) In another way, you should check the unit is water fully before the unit start to run again.

(5) After the unit is conditioned for the winter season, it is recommended to cover the heat pump with special winter heat pump.

(6) When the unit is running, there is all the time a little water discharge under the unit.

10. Wifi instruction

1. Heat-Pump with WIFI function

Thank you for using our heat pump with WIFI function, you can remote control your pool heat pump from your smart phone. The controller information could syncs to “Alsavo Pro” APP via an internet connection (WIFI or 3G/4G). For the first time connection, your smart phone and the WIFI controller must be under the same WIFI network. From then on, your smart phone can use the 3G/4G network to control pool heat pump remotely.

By “Alsavo Pro” APP, you can turn heat pump on or off, adjust water temperature, change mode, set time and timer on/off, check malfunction right at your finger tips.

”Alsavo pro” APP is compatible with Android system (6.10 version or above) and IOS system (8.0 version or above). Currently 10 languages (English, Swedish, French, Spanish, Italian, Czech, Polish, German, Russian, Chinese) available. Several heat pumps with WiFi controller could connect to one phone’s app, and several phones’ app could connect one heat pump.

2. “Alsavo Pro” APP operation

2.1 Firstly, please download ”Alsavo Pro” APP from App store or Google play in your smart phone.

2.2 Open “Alsavo Pro” APP, click “+” on the upper left and select “New device”. Then Click “Next” and enter the current WIFI password to connect. Press "⏻" 5S on the display no matter it’s ON or OFF. Or you can press "⏻" 5S on the controller first, then enter the current WIFi password. The WIFI icon  in the controller will flash, lastly long light. If the connection fails, the APP will indicate “Failed to connect device”.

"Nickname and password" interface only appear one time when a new heat pump is connected successfully. You can name and add encrypt this unit. (This interface may be missing if the wifi network is not stable. You will miss the chance to name and encrypt it. In this case, default password “123456” is available.)

If someone’s APP is in the same WIFI network as yours, this APP could automatically identify your heat pump. And he can operate your heat pump after inputting your password.


Alsavo Pro

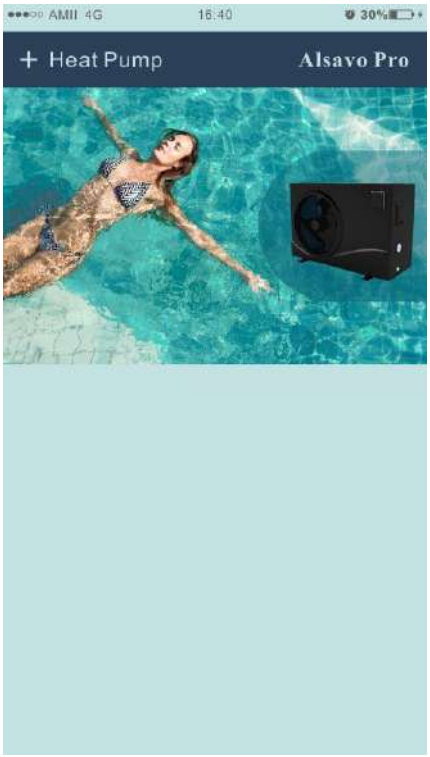
AMII 4G
16:40
30%
+ Heat Pump
Alsavo Pro


Instructions
Alsavo Pro
M
After being connected with electricity, long press in 5 second under WLAN. After hearing the sound of "BI",then click the next step.
next

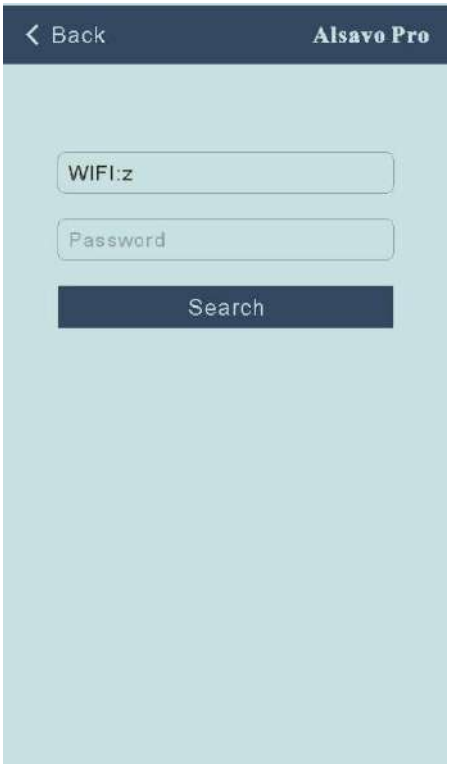
Back
Alsavo Pro
WIFI:z
Password
Search

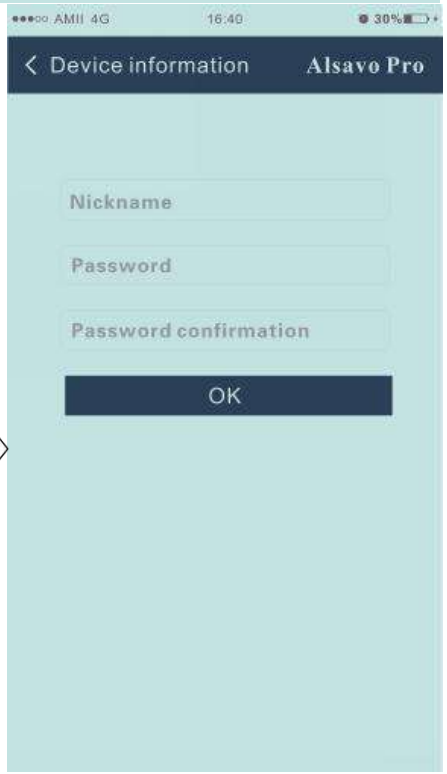
AMII 4G
16:40
30%
Device information
Alsavo Pro
Nickname
Password
Password confirmation
OK

2.3 The main interface

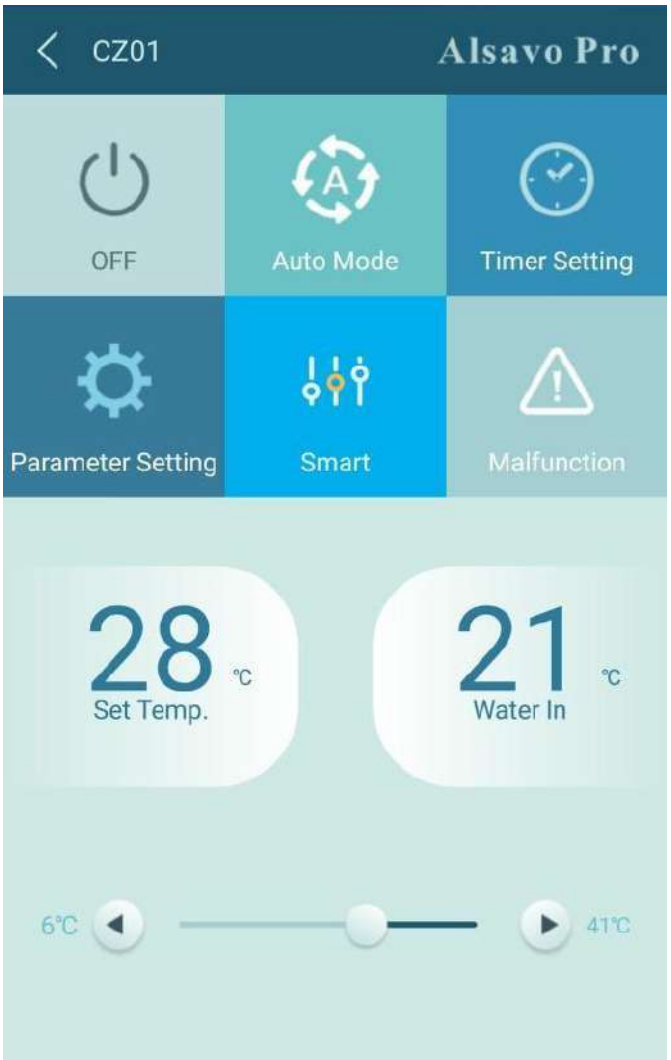

1) Turn ON/OFF

Click “  ” to turn on or off heat pump.

2) Switch mode

There are there modes (Auto mode, cooling or heating) for the inverter unit. Click its icons to switch

(Auto mode  , heating  , cooling )

3) Timer setting

Click  , it turns  . Timer on and off will be activated together. Then choose desired time in “timer on” and “timer off”, lastly click “OK” to confirm.

Click“  ” again to cancel.

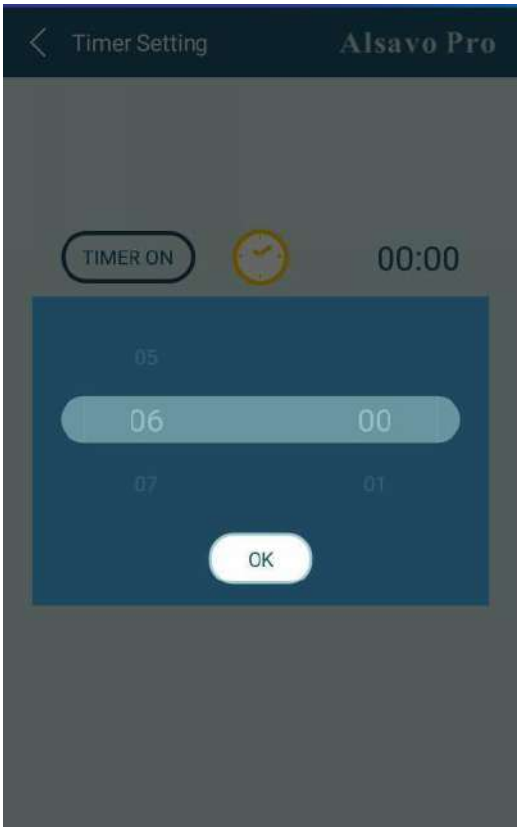

4) Parameter checking and setting

Click Parameter  , then enter the password “0757”.

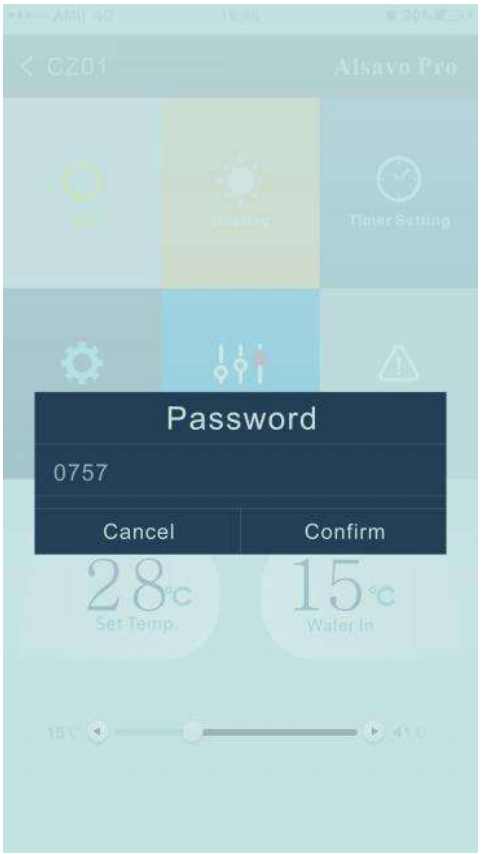

< Parameter	Alsavo Pro
Parameter Query	Default
Water In	22℃
Water Out	22℃
Heating piping temperature	22℃
Limited frequency code	0
Ambient temperature	23℃
Exhaust temperature	21℃
Actual steps of electronic expansion valve	350
IPM module temperature	25℃
Compressor running frequency	0Hz
Compressor current	0A
DC fan motor speed	0RPM
Parameter Setting	Range
Water Pump Operating Mode	0 (0~1)
Water Temperature Calibration	8.5℃ (-9.9℃~9.9℃)
Re-set to factory default setting	

5)Parameter setting:

1. There are 2 modes optional for water pump operation (1: Always running, 0: Depends on the running of compressor)
2. Inlet water temperature calibration. (-9.0 to 9.0℃)
3. Temperature unit: ℃ or ℉.
4. When you want to reset to factory default setting, tips as below pop up.

6) Switch running modes

In heating or cooling mode, there are 3 running modes(Silent, Smart, Powerful/TURBO) for options

(TURBO)

While in Auto mode, its default running mode is Smart.

7) Malfunction

If error occurs, the malfunction icon  turns red  . Click it to check the error.

< Malfunction **Alsavo Pro**

Error code	Malfunction
PP01	Inlet water temperature sensor failure
PP02	Outlet water temperature sensor failure
PP03	Heating coil pipe sensor failure
PP04	Gas return sensor failure
PP05	Ambient temperature sensor failure
PP06	Exhaust temperature sensor failure
PP07	Anti-freezing protection in Winter
PP08	Low ambient temperature protection
PP10	Coil pipe temperature too high protection under Cooling mode
PP11	T2 too low water temperature protection under cooling mode
EE01	High pressure failure
EE02	Low pressure failure
EE03	Water flow failure
EE04	Water temperature overheating protection under heating mode
EE05	Exhaust temperature too high failure
EE06	Controller malfunction or communication failure
EE07	Compressor current protection
EE08	Communication failure between controller and PCB
EE09	Communication failure between PCB and driver board
EE10	VDC Voltage too high protection
EE11	IPM Module protection
EE12	VDC Voltage too low protection
EE13	Input current too strong protection
EE14	IPM module thermal circuit is abnormal
EE15	IPM module temperature too high protection
EE16	PFC module protection
EE17	DC fan failure
EE18	PFC module thermal circuit is abnormal
EE19	PFC module high temperature protection
EE20	Input power failure
EE21	Software control failure
EE22	Current detection circuit failure
EE23	Compressor start failure
EE24	Ambient temperature device failure on Driving board
EE25	Compressor phase failure
EE26	4-way valve reversal failure
EE27	EEPROM data reading failure in Transfer board
EE28	The inter-chip communication failure on the main control board

8) Temperature setting

You can set the target water temperature by adjusting the slider or press “  ” or ”  ”. The setting water temperature on the controller display correspondingly changes after letting go. When the setting water temperature on the display changes, it will be synchronously updated to the APP.

9) Check device information

In the main interface, click the upper right “Alsavo Pro”. The Device information will show up.

10) Revise the heat pump info in the homepage

Click “  ” , you could rename, change its password and delete the device.