blueplus
nova

INVERTER SWIMMING POOL HEAT PUMP

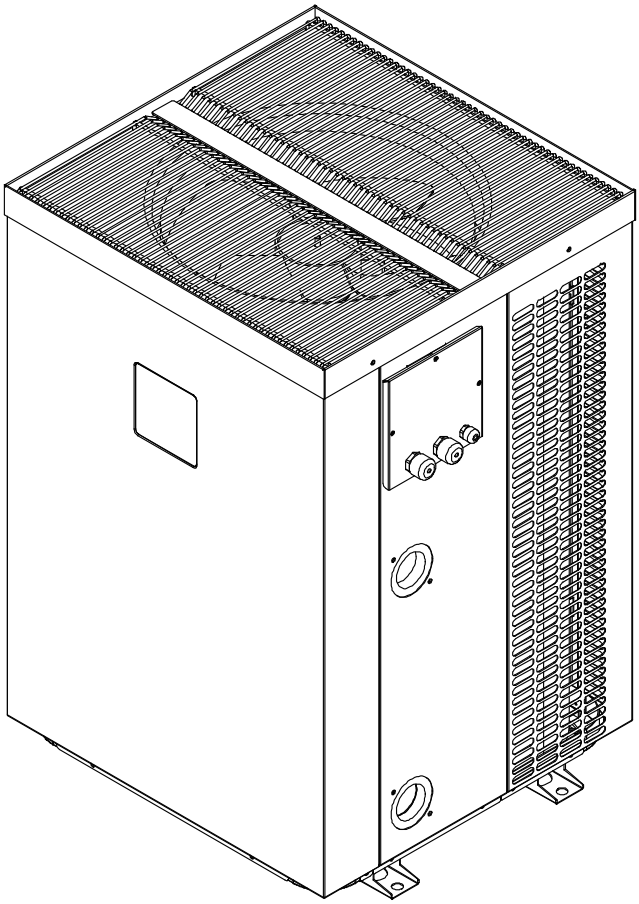

R32

Full DC Inverter

INSTALLATION AND OPERATION MANUAL

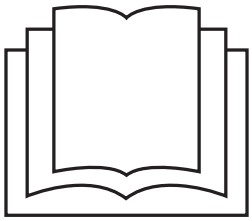
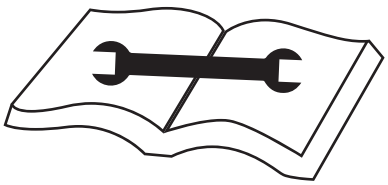
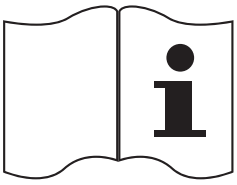

CONTENTS

1 Safety instructions 01
- 1.1 Installation precautions 01
- 1.2 Other safety considerations 02

2 Specifications 09
- 2.1 Performance data 09
- 2.2 Dimensions 11
- 2.3 Exploded view 15

3 Installation and connection 17
- 3.1 Heat pump location 17
- 3.2 Installation space requirements 17
- 3.3 Piping installation illustration 18
- 3.4 Installation of check valve 18
- 3.5 Electrical wiring 18
- 3.6 Wiring diagrams 20
- 3.7 Initial start-up of the unit 23
- 3.8 Condensation 23

4 Operation and use 24
- 4.1 Display interface introduction 24
- 4.2 Operating instructions 24
  - 4.2.1 Key lock and unclock 24
  - 4.2.2 Power On/Off 25
  - 4.2.3 Switching the operating mode 25
  - 4.2.4 Temperature adjustment 26
  - 4.2.5 Time adjustment 26
  - 4.2.6 Timer setting 27
- 4.3 Parameter table 31
  - 4.3.1 Temperature status query table 31
  - 4.3.2 User parameters query table 32
- 4.4 Error codes and troubleshooting 33
  - 4.4.1 The compressor does not start 34
  - 4.4.2 The fan is not running 35

5 Maintenance and inspection 35

6 Warranty 35

1. Safety instructions

1.1 Installation precautions

Please make sure that you have at least read the “safety instructions” chapter of this manual before using the air source unit of our company. The "safety instructions" provides very important safety tips and key points of unit use. Please make sure that you follow the instructions to ensure personal safety and normal operation of the unit.

The meaning of symbols used in the text:

Warning	Serious consequences such as death, serious injury or major accident may occur due to incorrect use and operation.
Notice	Improper use may cause safety accidents, damage the machine or affect the use of the machine.

Please read the label on the heat pump carefully. If any abnormality is found during use, such as abnormal noise, smell, smoke, temperature rise, electric leakage, fire, etc., please cut off the power supply immediately and contact the local agent of the company in time. Do not repair by yourself. If necessary, contact the local fire and first aid department immediately.

Warning

1. The unit shall not be installed by users, but must be installed by agents or professional installation companies, otherwise it may cause safety accidents and affect the use effect.
2. Do not disassemble the machine without authorization unless you are instructed by professionals, otherwise accidents or damage to the machine may occur.
3. Do not use or store flammables such as hair gel, paint, gasoline and alcohol,etc. around the machine, otherwise there is the possibility of fire.
4. The master power switch of the unit should be placed in a place out of reach of children to prevent the danger of children playing with the power switch.
5. Do not spray water or other liquids on the unit,otherwise danger may occur.
6. Do not operate the machine with wet hands, otherwise it may cause danger.
7. In thunderstorm weather, please turn off the master power switch of the machine, otherwise lightning may cause danger or damage the machine.
8. The unit shall use independent power supply to avoid sharing the same circuit with other electrical appliances; It is recommended to use separate lines and circuit breakers with leakage protection.

9. The unit belongs to class I electrical appliances. The power supply must have a reliable grounding wire. Do not connect the grounding wire with the grounding wire of gas pipeline, water pipe, lightning conductor or telephone, so as to avoid accidents.
10. Do not forcibly cut off the power supply when the unit is running to avoid accidents.
11. The installation space of the unit shall be well ventilated to ensure that once there is refrigerant leakage, it can be dissipated in time. At the same time, there is no fire source around the installation position, such as heater, stove, etc., otherwise the refrigerant may contact the fire source, which may produce toxic gas or combustion, which is very easy to cause personnel poisoning, fire accidents, etc.

Notice

- Household power supply and circuit meet relevant standards.
- The power circuit is equipped with leakage protector.
- The power cord is not damaged. If there is any damage, please contact the relevant dealer or professional for replacement.
- The unit shall be installed firmly without violent vibration and noise interference to neighbors.
- The drainage piping can drain smoothly. It will not cause water leakage, wet furniture, etc.
- When the machine is not used for a long time, please disconnect the master power switch and empty the waterway at the same time to avoid accidents.

1.2 Other safety considerations

Warning

1. The unit can only be repaired by qualified installer centre personnel or an authorized dealer.
2. This appliance is not intended for use by persons (including children from 8 years and above) with reduced physical sensory or mental capabilities, or lack of experience and knowledge, unless they have been given supervision or instruction concerning use of the appliance by a person responsible for their safety. Children should be supervised to ensure that they do not play with the appliance.Cleaning and user maintenance shall not be made by children without supervision.
3. Please make sure that the unit and power connection have good earthing, otherwise may cause electrical shock.
4. If the supply cord is damaged, it must be replaced by the manufacturer or our service agent or similarly qualified person in order to avoid a hazard.
5. Do not use means to accelerate the defrosting process or to clean, other than those recommended by the manufacturer.
6. The refrigerant used in this product meets the relevant requirements of EU.
7. Any person who is involved with working on or breaking into a refrigerant circuit should hold a current valid certificate from an industry-accredited assessment authority, which authorizes their competence to handle refrigerants safely in accordance with an industry recognized assessment specification.

8. The unit CANNOT be installed near the flammable gas. Once there is any leakage of the gas, fire can be occur. Do not pierce or burn the appliance,otherwise the refrigerant will leak, leading to fire or explosion.Be aware that refrigerants may not contain an odour, please observe whether the refrigerant leaks carefully.

9. The appliance shall be stored in a well-ventilated area where the room size corresponds to the room area as specified for operation. And the room must be no continuously operating ignition sources (for example: open flames, an operating gas appliance or an operating electric heater.) The appliance shall be stored so as to prevent mechanical damage from occurring.

10. The refrigerant used in the appliance is inflammable and explosive. Protective measures shall be taken when installing, repairing and cleaning. Open flames or an operating electric heater must be prohibited at the work site and well ventilation shall be maintained to prevent the accumulation of refrigerant in case of leakage.

In case of refrigerant leakage:

(1) Turn off the power, remove the potential ignition source, evacuate the personnel and stay away from the scene.

(2) Emergency area shall be set within 20m away from the site, and irrelevant personnel are strictly prohibited to enter.

(3) After the danger is eliminated, open the ventilation facilities to remove the leakage point and the surrounding residual refrigerant

11. Servicing shall only be performed as recommended by the equipment manufacturer. Maintenance and repair requiring the assistance of other skilled personnel shall be carried out under the supervision of the person competent in the use of flammable refrigerants.

12. The service personnel who shall be instructed to undertake the following when servicing an appliance that employs a flammable refrigerant:

(1) Checks to the area
Prior to beginning work on systems containing flammable refrigerants, safety checks are necessary to ensure that the risk of ignition is minimized. For repair to the refrigerating system, the following precautions shall be complied with prior to conducting work on the system.

(2) Work procedure
Work shall be undertaken under a controlled procedure so as to minimize the risk of a flammable gas or vapour being present while the work is being performed.

(3) General work area
All maintenance staff and others working in the local area shall be instructed on the nature of work being carried out. Work in confined spaces shall be avoided. The area around the workspace shall be sectioned off. Ensure that the conditions within the area have been made safe by control of flammable material.

(4) Checking for presence of refrigerant
The area shall be checked with an appropriate refrigerant detector prior to and during work, to ensure the technician is aware of potentially flammable atmospheres. Ensure that the leak detection equipment being used is suitable for use with flammable refrigerants, i.e. non sparking, adequately sealed or intrinsically safe.

(5) Presence of fire extinguisher

If any hot work is to be conducted on the refrigeration equipment or any associated parts, appropriate fire extinguishing equipment shall be available to hand. Have a dry powder or CO2 fire extinguisher adjacent to the charging area.

(6) No ignition sources

No person carrying out work in relation to a refrigeration system which involves exposing any pipe work that contains or has contained flammable refrigerant shall use any sources of ignition in such a manner that it may lead to the risk of fire or explosion. All possible ignition sources, including cigarette smoking, should be kept sufficiently far away from the site of installation, repairing, removing and disposal, during which flammable refrigerant can possibly be released to the surrounding space. Prior to work taking place, the area around the equipment is to be surveyed to make sure that there are no flammable hazards or ignition risks. “No Smoking” signs shall be displayed.

(7) Ventilated area

Ensure that the area is in the open or that it is adequately ventilated before breaking into the system or conducting any hot work. A degree of ventilation shall continue during the period that the work is carried out. The ventilation should safely disperse any released refrigerant and preferably expel it externally into the atmosphere.

(8) Checks to the refrigeration equipment

Where electrical components are being changed, they shall be fit for the purpose and to the correct specification. At all times the manufacturer’s maintenance and service guidelines shall be followed. If in doubt consult the manufacturer’s technical department for assistance.

(9) Checks to electrical devices

Repair and maintenance to electrical components shall include initial safety checks and component inspection procedures. If a fault exists that could compromise safety, then no electrical supply shall be connected to the circuit until it is satisfactorily dealt with. If the fault cannot be corrected immediately but it is necessary to continue operation, an adequate temporary solution shall be used. This shall be reported to the owner of the equipment so all parties are advised. Initial safety checks shall include:

- That capacitors are discharged: this shall be done in a safe manner to avoid possibility of sparking;
- That no live electrical components and wiring are exposed while charging, recovering or purging the system.
- That there is continuity of earth bonding.

(10) Repairs to sealed components

- During repairs to sealed components, all electrical supplies shall be disconnected from the equipment being worked upon prior to any removal of sealed covers, etc. If it is absolutely necessary to have an electrical supply to equipment during servicing, then a permanently operating form of leak detection shall be located at the most critical point to warn of a potentially hazardous situation.
- Particular attention shall be paid to the following to ensure that by working on electrical components, the casing is not altered in such a way that the level of protection is affected. This shall include damage to cables, excessive number of connections, terminals not made to original specification, damage to seals, incorrect fitting of glands, etc.
- Ensure that apparatus is mounted securely.

- Ensure that seals or sealing materials have not degraded such that they no longer serve the purpose of preventing the ingress of flammable atmospheres. Replacement parts shall be in NOTE the use of silicon sealant may inhibit the effectiveness of some types of leak detection equipment. Intrinsically safe components do not have to be isolated prior to working on them.

13. Repair to intrinsically safe components
    Do not apply any permanent inductive or capacitance loads to the circuit without ensuring that this will not exceed the permissible voltage and current permitted for the equipment in use.
    Intrinsically safe components are the only types that can be worked on while live in the presence of a flammable atmosphere. The test apparatus shall be at the correct rating. Replace components only with parts specified by the manufacturer. Other parts may result in the ignition of refrigerant in the atmosphere from a leak.

14. Cabling
    Check that cabling will not be subject to wear, corrosion, excessive pressure, vibration, sharp edges or any other adverse environmental effects. The check shall also take into account the effects of ageing or continual vibration from sources such as compressors or fans.

15. Detection of flammable refrigerants
    Under no circumstances shall potential sources of ignition be used in the searching for or detection of refrigerant leaks. A halide torch (or any other detector using a naked flame) shall not be used.

16. Leak detection methods
    The following leak detection methods are deemed acceptable for systems containing flammable refrigerants.
    Electronic leak detectors shall be used to detect flammable refrigerants, but the sensitivity may not be adequate, or may need re-calibration. (Detection equipment shall be calibrated in a refrigerant-free area.) Ensure that the detector is not a potential source of ignition and is suitable for the refrigerant used. Leak detection equipment shall be set at a percentage of the LFL of the refrigerant and shall be calibrated to the refrigerant employed and the appropriate percentage of gas (25 % maximum) is confirmed.Leak detection fluids are suitable for use with most refrigerants but the use of detergents containing chlorine shall be avoided as the chlorine may react with the refrigerant and corrode the copper pipe-work.If a leak is suspected, all naked flames shall be removed/extinguished. If a leakage of refrigerant is found which requires brazing, all of the refrigerant shall be recovered from the system, or isolated (by means of shut off valves) in a part of the system remote from the leak. Oxygen free nitrogen (OFN) shall then be purged through the system both before and during the brazing process.

17. Removal and evacuation
    When breaking into the refrigerant circuit to make repairs or for any other purpose, conventional procedures shall be used.However, it is important that best practice is followed since flammability is a consideration. The following procedure shall be adhered to:

    (1) Remove refrigerant;
    (2) Purge the circuit with inert gas;
    (3) Evacuate;
    (4) Purge again with inert gas;
    (5) Open the circuit by cutting or brazing.

The refrigerant charge shall be recovered into the correct recovery cylinders. The system shall be “flushed” with OFN to render the unit safe. This process may need to be repeated several times. Compressed air or oxygen shall not be used for this task.Flushing shall be achieved by breaking the vacuum in the system with OFN and continuing to fill until the working pressure is achieved, then venting to atmosphere, and finally pulling down to a vacuum. This process shall be repeated until no refrigerant is within the system. When the final OFN charge is used, the system shall be vented down to atmospheric pressure to enable work to take place. This operation is absolutely vital if brazing operations on the pipework are to take place. Ensure that the outlet for the vacuum pump is not close to any ignition sources and there is ventilation available.

18. Charging procedures
In addition to conventional charging procedures, the following requirements shall be followed.

(1) Ensure that contamination of different refrigerants does not occur when using charging equipment. Hoses or lines shall be as short as possible to minimize the amount of refrigerant contained in them;
(2) Cylinders shall be kept upright;
(3) Ensure that the refrigeration system is earthed prior to charging the system with refrigerant;
(4) Label the system when charging is complete (if not already).
Extreme care shall be taken not to overfill the refrigeration system.
Prior to recharging the system it shall be pressure tested with OFN. The system shall be leak tested on completion of charging but prior to commissioning. A follow up leak test shall be carried out prior to leaving the site.

19. Decommissioning
Before carrying out this procedure, it is essential that the technician is completely familiar with the equipment and all its detail. It is recommended good practice that all refrigerants are recovered safely. Prior to the task being carried out, an oil and refrigerant sample shall be taken in case analysis is required prior to re-use of reclaimed refrigerant. It is essential that electrical power is available before the task is commenced.

(1) Become familiar with the equipment and its operation.
(2) Isolate system electrically.
(3) Before attempting the procedure ensure that:

- Mechanical handling equipment is available, if required, for handling refrigerant cylinders;
- All personal protective equipment is available and being used correctly;
- The recovery process is supervised at all times by a competent person;
- Recovery equipment and cylinders conform to the appropriate standards.

(4) Pump down refrigerant system, if possible.
(5) If a vacuum is not possible, make a manifold so that refrigerant can be removed from various parts of the system.
(6) Make sure that cylinder is situated on the scales before recovery takes place.
(7) Start the recovery machine and operate in accordance with manufacturer's instructions.
(8) Do not overfill cylinders. (No more than 80 % volume liquid charge).
(9) Do not exceed the maximum working pressure of the cylinder, even temporarily.
(10) When the cylinders have been filled correctly and the process completed, make sure that the cylinders and the equipment are removed from site promptly and all isolation valves on the equipment are closed off.

(11) Recovered refrigerant shall not be charged into another refrigeration system unless it has been cleaned and checked.

20. Labelling
Equipment shall be labelled stating that it has been de-commissioned and emptied of refrigerant. The label shall be dated and signed. Ensure that there are labels on the equipment stating the equipment contains flammable refrigerant.

21. Recovery
When removing refrigerant from a system, either for servicing or decommissioning, it is recommended good practice that all refrigerants are removed safely.

22. Electrical wiring
The appliance shall be installed in accordance with national wiring regulations. Make sure that there is a circuit breaker for the unit, lack of a circuit breaker can lead to electrical shock or fire.

Air source heat pump winter anti-freezing measurements:

- Strengthen the insulation material of piping.
- Condensate water should be properly disposed off.
- When it will not be used for a long time during winter, add a three way pipe and ball valve for inlet and outlet respectively to drain water off the system and piping.

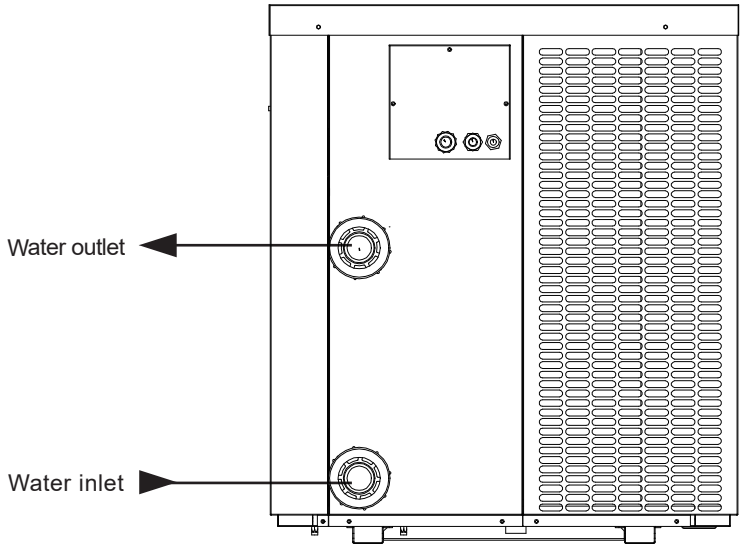

- Clear debris and snow around the heat pump periodically.

- Add antifreeze to the system,details please refer to following instruction:

  If antifreeze is added, the following possible conditions must be noted, depending on the concentration of the mixture:

  (1) The heat output of the heat pump decreases.
  (2) COP reduction.
  (3) Reduced delivery rate of on-site circulation pump; free pressure drop specified for integrated circulation pump.
  (4) Compatibility of component materials used with antifreeze mixtures must be ensured.

Notice

For system antifreeze, it is best to use antifreeze specially designed for heat pumps. Considering the corrosion resistance of water pumps, filter valves as well as the thermal performance of the heat pump, we suggest that the concentration of glycol should not exceed 30%.

2. Specifications

2.1 Performance data

Model		7kW-03127008	10kW-03127009	12.5kW-03127010	17kW-03127011
Function		Cooling&Heating			
Technology		Full inverter/Wifi included			
Control		LED digital display			
Operating ambient temp.	℃	-15~45			
Power supply		220-240V~,50Hz			
Heating temperature range	℃	15~40			
Cooling temperature range	℃	10~30			
Casing type		Galvanized Steel with outdoor UV-Resistant Coating			
Color		Black			
Refrigerant Type		R32			
Heating: (Air 26 Water 26℃/ Humidity 80%)	Capacity (kW)	1.92~6.33	3.03~9.57	3.76~12.32	5.25~16.57
	Power input(kW)	0.15~1.08	0.26~1.53	0.30~1.96	0.40~2.53
	COP	5.86~12.80	6.25~11.65	6.29~12.53	6.55~13.13
Heating: (Air 15℃ Water 26℃/ Humidity 70%)	Capacity (kW)	1.47~4.61	2.19~7.03	2.79~9.05	4.07~12.52
	Power input(kW)	0.21~0.97	0.36~1.49	0.38~1.83	0.57~2.43
	COP	4.75~7.00	4.72~6.08	4.95~7.34	5.15~7.14
Cooling: (Air 35℃ Water 28℃/ Humidity 40%)	Capacity (kW)	2.71~3.76	3.50~4.60	3.49~5.01	5.77~8.37
	Power input(kW)	0.46~0.84	0.65~0.96	0.68~1.37	0.97~1.83
	EER	4.48~5.89	4.79~5.38	3.66~5.13	4.57~5.95
Max power input	kW	1.50	2.25	2.80	3.50
Max current	A	7.2	10	12.5	16
Sound pressure @1 m	dB(A)	41.5~49.3	41.6~50.4	43.6~49.6	42.4~54.5
Compressor		Twin-rotary DC Inverter			
Condenser		Spiral titanium tube in PVC			
Evaporator		Hydrophilic aluminium fins & copper tubes			
Fan type		DC inverter fan motor			
Fan qty		1			
Advised water flow	m³/h	1.9	3.1	3.8	5.3
Water connection	mm	50	50	50	50
Unit dimensions(W*D*H)	mm	525*510*796			679*694*796

*The above data is for reference only.For more specific data, check the appliance's characteristics plate.

Model		**21kW-03127012**
Function		Cooling&Heating
Technology		Full inverter/Wifi included
Control		LED digital display
Operating ambient temp.	℃	-15~45
Power supply		220-240V~,50Hz
Heating temperature range	℃	15~40
Cooling temperature range	℃	10~30
Casing type		Galvanized Steel with outdoor UV-Resistant Coating
Color		Black
Refrigerant Type		R32
Heating: (Air 26	Capacity (kW)	6.29~20.96
Water 26℃/	Power input(kW)	0.47~3.30
Humidity 80%)	COP	6.35~13.38
Heating: (Air 15℃	Capacity (kW)	4.99~16.12
Water 26℃/	Power input(kW)	0.63~3.11
Humidity 70%)	COP	5.18~7.92
Cooling: (Air 35℃	Capacity (kW)	5.55~7.69
Water 28℃/	Power input(kW)	0.95~1.66
Humidity 40%)	EER	4.63~5.84
Max power input	kW	3.92
Max current	A	17.5
Sound pressure @1 m	dB(A)	44.2~54.4
Compressor		Twin-rotary DC Inverter
Condenser		Spiral titanium tube in PVC
Evaporator		Hydrophilic aluminium fins & copper tubes
Fan type		DC inverter fan motor
Fan qty		1
Advised water flow	m^3/h	6.3
Water connection	mm	50
Unit dimensions(W*D*H)	mm	679*694*796

*The above data is for reference only.For more specific data, check the appliance's characteristics plate.

2.2 Dimensions(unit:mm)

blueplus nova 7kW-03127008,230V

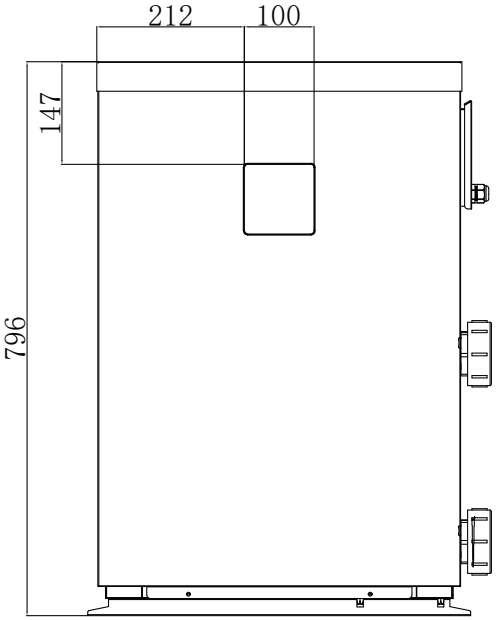

Front

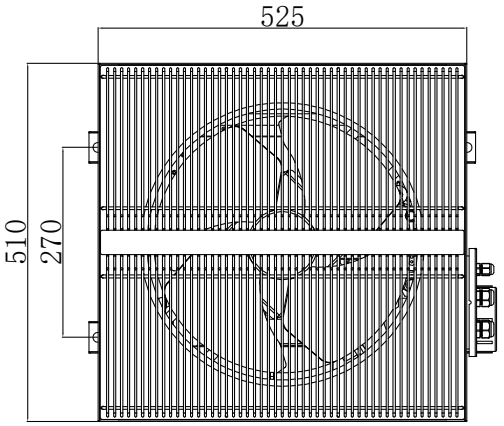

Top

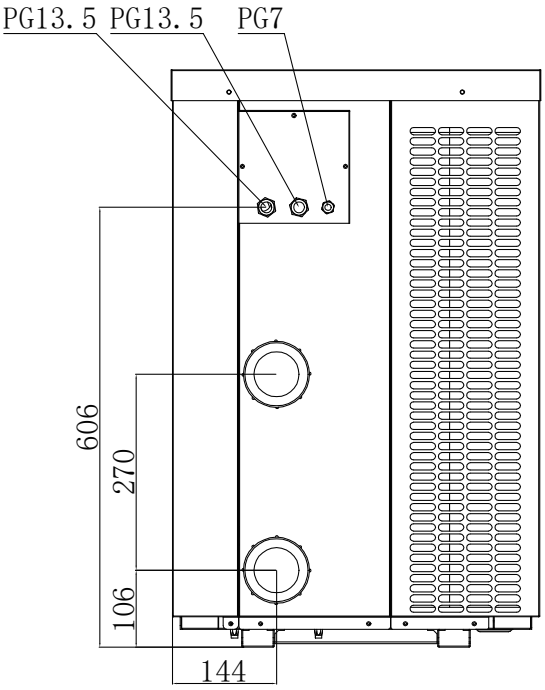

Side

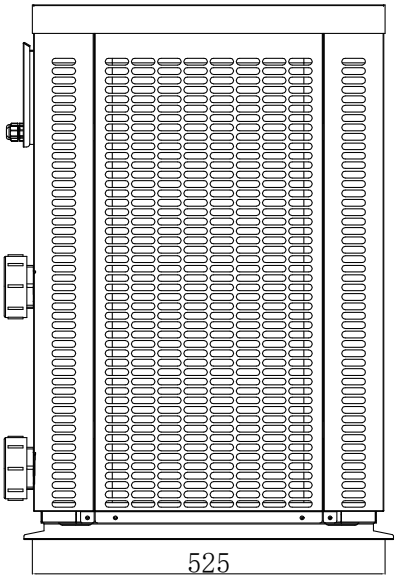

Back

blueplus nova 10kW-03127009,230V

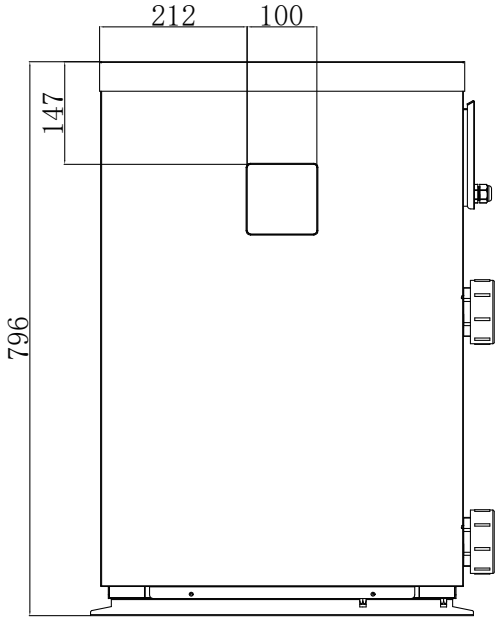

Front

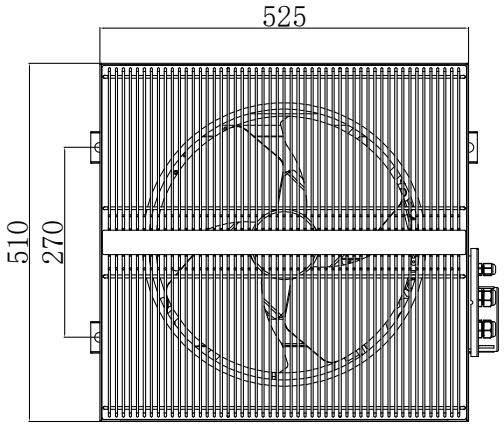

Top

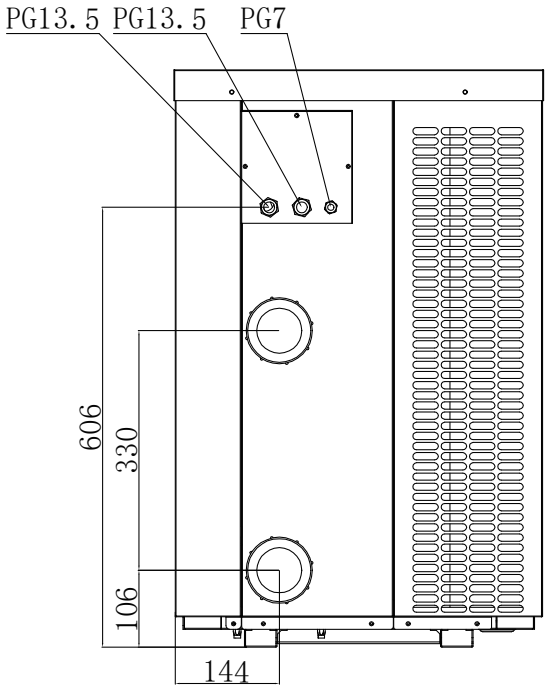

Side

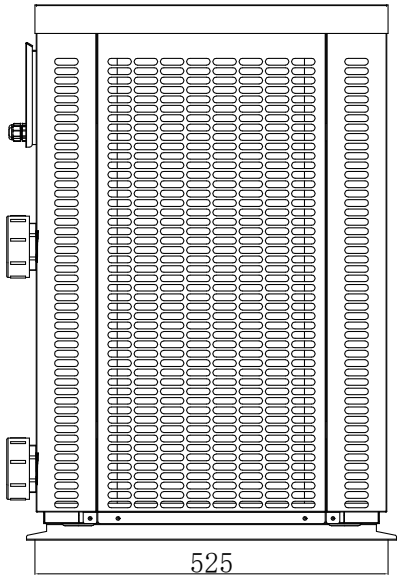

Back

blueplus nova 12.5kW-03127010,230V

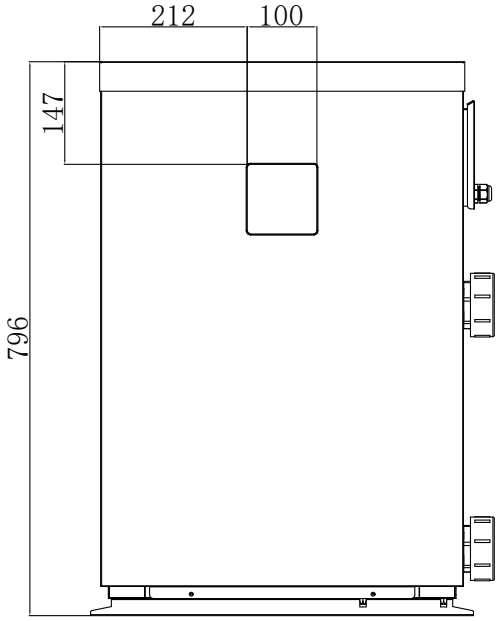

Front

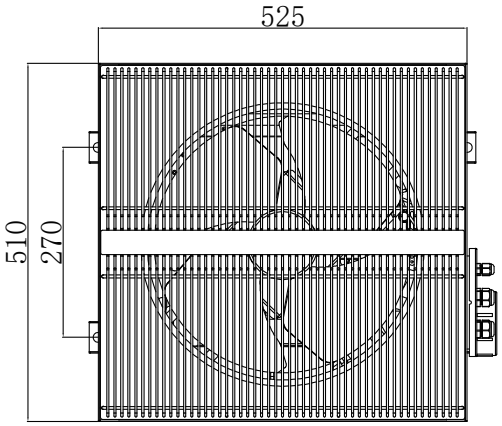

Top

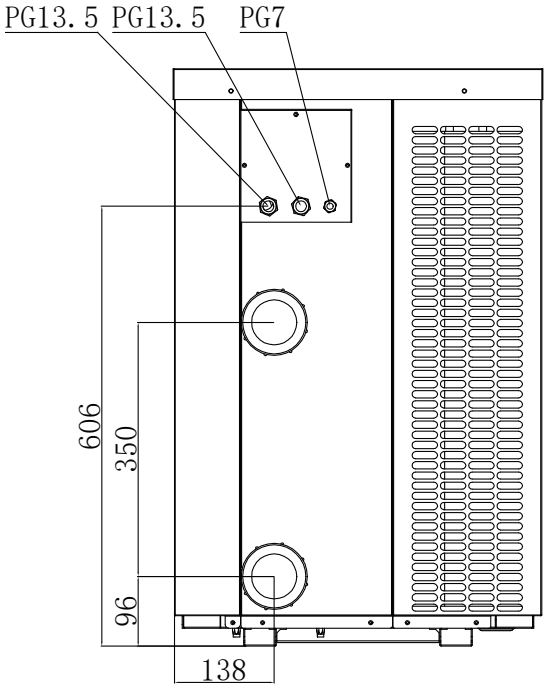

Side

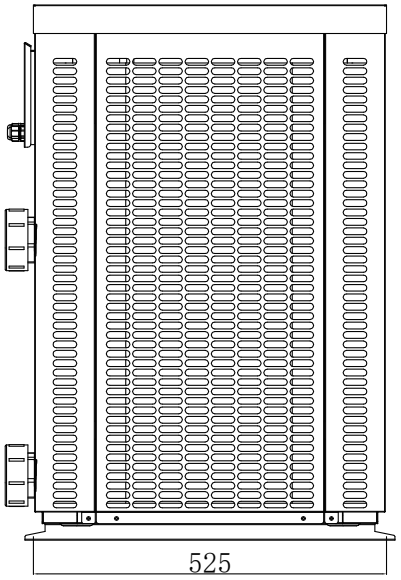

Back

blueplus nova 17kW-03127011/21kW-03127012,230V

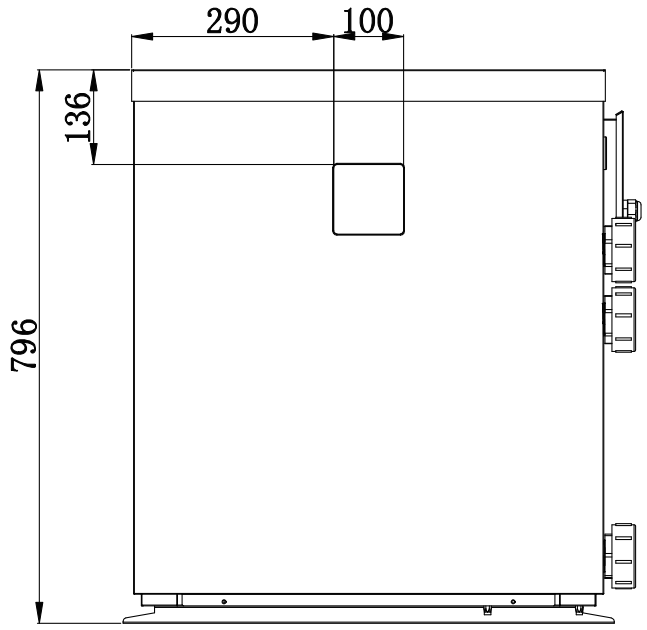

Front

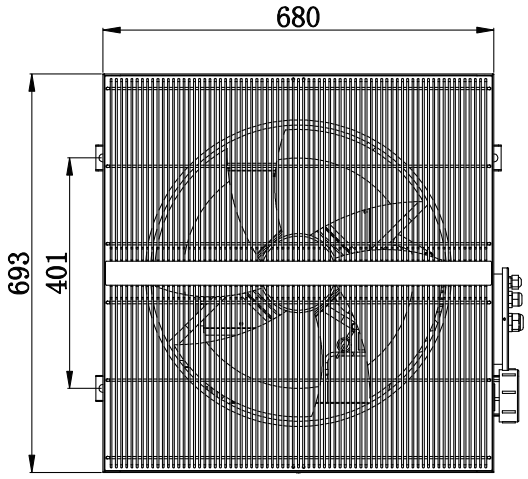

Top

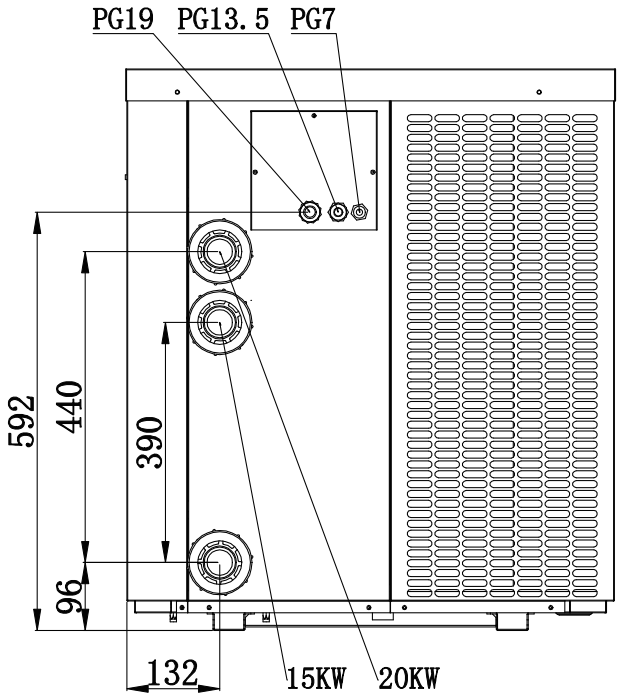

Side

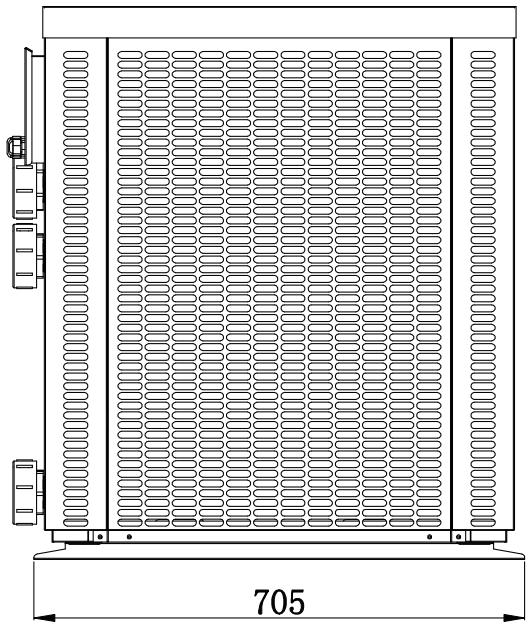

Back

2.3 Exploded view

blueplus nova 7kW-03127008/10kW-03127009/12.5kW-03127010,230V

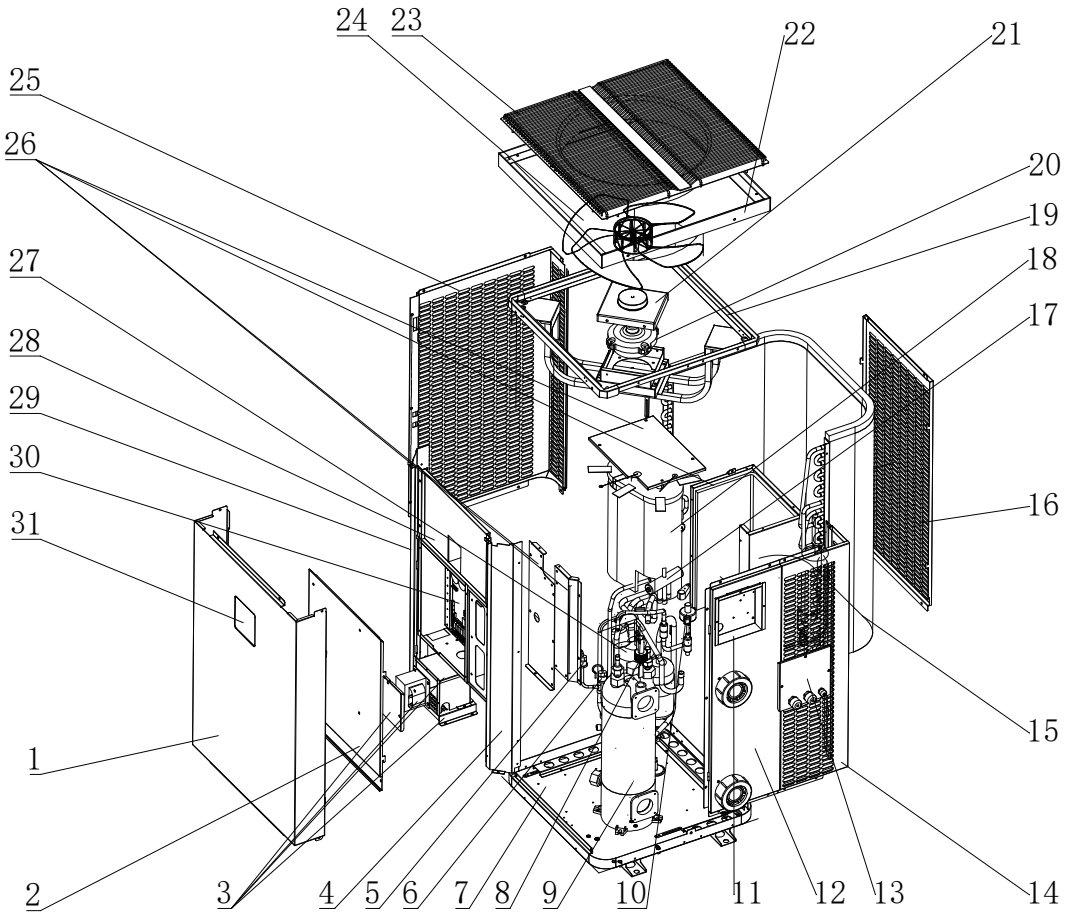

1	Front panel	17	Four-way valve
2	Electric control box cover	18	Compressor Soundproof Jacket
3	Reactance Component	19	Motor bracket
4	Right column	20	DC Fan motor
5	High pressure switch	21	Fan motor
6	Low pressure switch	22	Top cover component
7	Chassis	23	Air outlet grill
8	Water flow switch	24	Fan blades
9	Titanium heat exchanger	25	Left panel
10	Electronic expansion valve	26	Compressor cover
11	Terminal box	27	Compressor
12	Water inlet&outlet panel	28	Electric control box cover
13	Terminal box cover	29	Left column
14	Right panel	30	Electrical Control Components
15	Evaporator	31	Wire controller
16	Back panel		

blueplus nova 17kW-03127011/21kW-03127012,230V

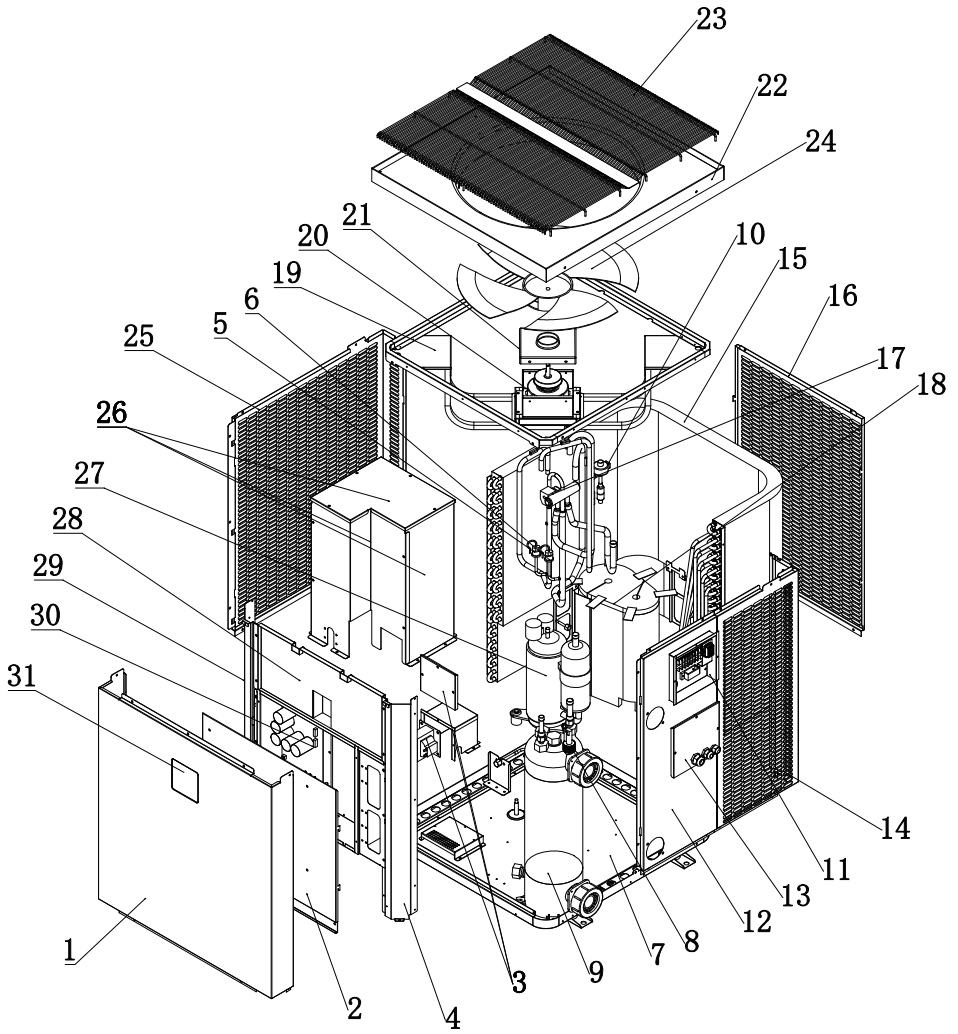

1	Front panel	17	Four-way valve
2	Electric control box cover	18	Compressor Soundproof Jacket
3	Reactance Component	19	Motor bracket
4	Right column	20	DC Fan motor
5	High pressure switch	21	Fan motor
6	Low pressure switch	22	Top cover component
7	Chassis	23	Air outlet grill
8	Water flow switch	24	Fan blades
9	Titanium heat exchanger	25	Left panel
10	Electronic expansion valve	26	Compressor cover
11	Terminal box	27	Compressor
12	Water inlet&outlet panel	28	Electric control box cover
13	Terminal box cover	29	Left column
14	Right panel	30	Electrical Control Components
15	Evaporator	31	Wire controller
16	Back panel		

3. Installation and connection

3.1 Heat pump location

The unit will perform well in any outdoor location provided that the following three factors are presented:
1. Fresh Air - 2. Electricity - 3. Pool filter piping
The unit may be installed virtually anywhere outdoors. For indoor pools please consult the supplier.Unlike a gas heater, it has no draft or pilot light problem in a windy area.

DO NOT -	place the unit in an enclosed area with a limited air volume, where the units discharge air will be re-circulated.
DO NOT -	place the unit to shrubs which can block air inlet. These locations deny the unit of a continuous source of fresh air which reduces its efficiency and may prevent adequate heat delivery.

Normally, the pool heat pump is installed within 7.5 meters of the pool. The longer the distance from the pool, the greater the heat loss from the piping. For the most part, the piping is buried. Therefore, the heat loss is minimal for runs of up to15 meters(15 meters to and from the pump= 30 meters total), unless the ground is wet or the water table is high. A very rough estimate of heat loss per 30 meters is 0.6 kW-hour,(2000BTU)for every 5°C difference in temperature between the pool water and the ground surrounding the pipe, which translates to about 3% to 5% increase in run time.

3.2 Installation space requirements

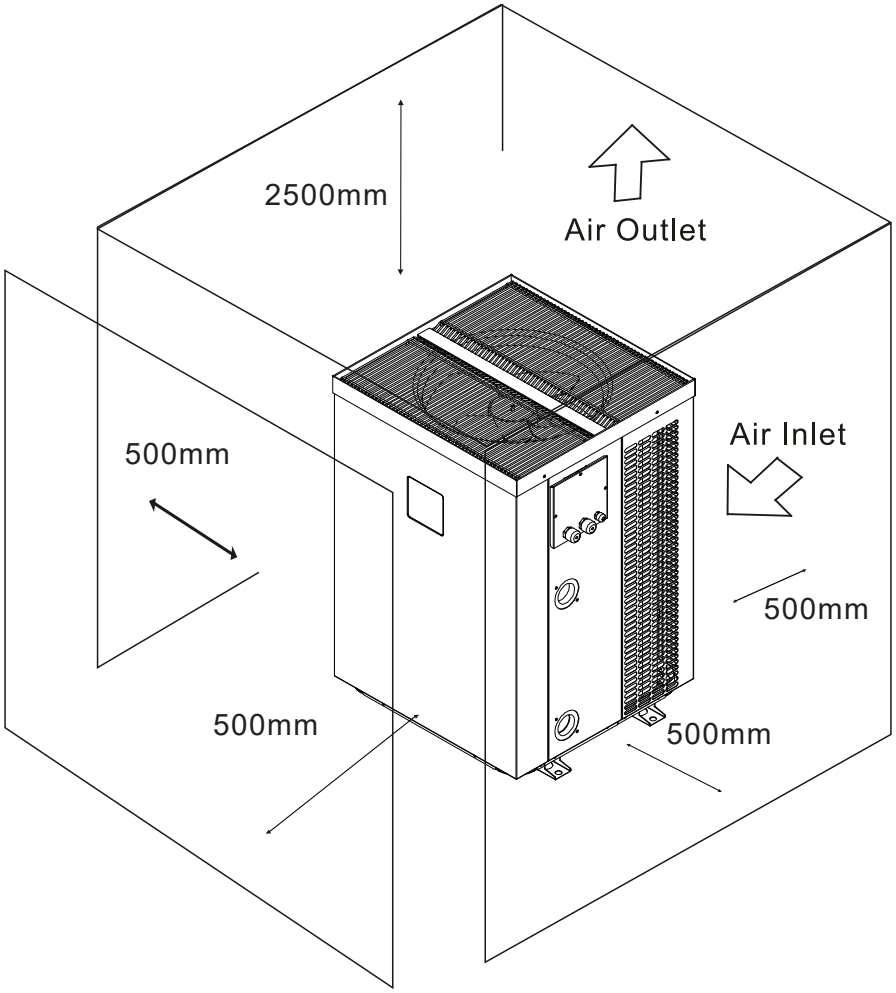

3.3 Piping installation illustration

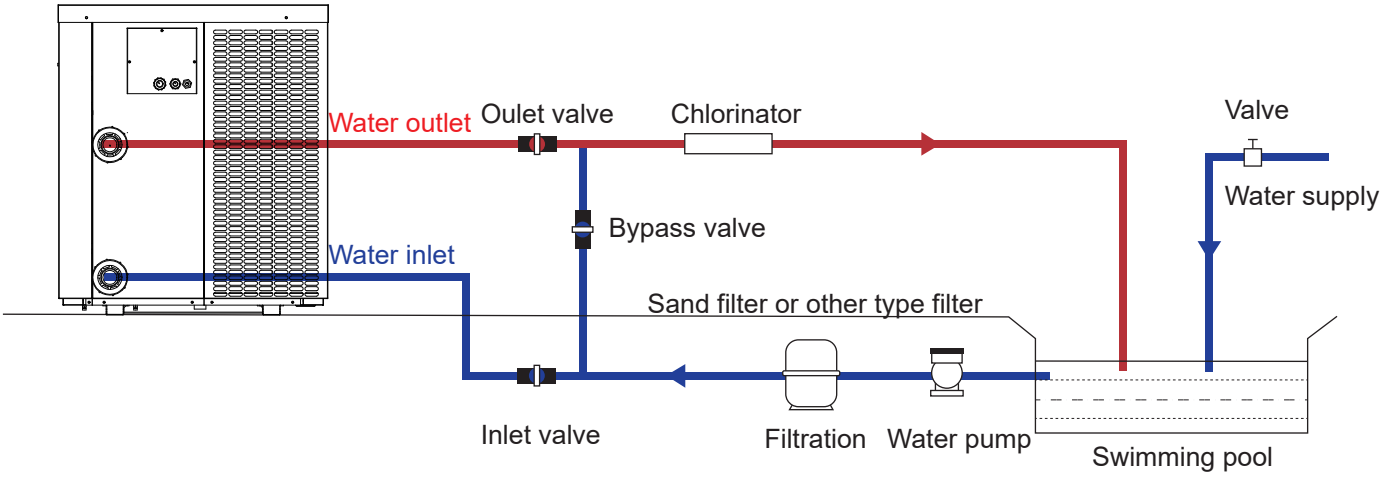

REMARKS - The factory only provides the heat pump and PVC connector. Other parts, including a contingent by-pass are to be provided by the user or installer.

Attention:
Please take the following steps when installing the heat pump:
* Each addition of chenicals has to be performed through the conduits located AFTER the heat pump.
* Install a by-pass for easy maintenance.
* Always place the heat pump on a soild base and use the supplied silent blocks in order to avoid vibrations and noise.
* Always keep the heat pump in upright position.If the unit has been tilted,you should wait for at least 24 hours before turning it on.

3.4 Installation of check valve

When using automatic chlorine and pH dosage systems, it is of uttermost importance to protect the heat pump from high concentrations of these chemicals that could corrode the heat exchanger Therefore,such systems should add the chemicals in the conduits located DOWNSTREAM of the heat pump and it is recommended to install a check-valve in order to prevent back-flow when there is no water circulation.Damage to the heat pump caused by disregarding any of these recommendations will invalidate the warranty.

3.5 Electrical wiring

IMPORTANT - Although the heat pump is electrically isolated from the rest of the unit, this only prevents the passage of electricity to or from the pool water. Grounding the unit is still required to protect yourself from short circuits inside the unit. Make for adequate ground connection.

Check if the electrical mains voltage corresponds with the operating voltage of the heat pump prior to hooking up the unit. It is recommended to use a separate fuse (C-curve) as well as adequate wiring(see table below). Connect the electrical wires with the terminal block labeled 'TO POWER SUPPLY'.

Next to this connection, there is a terminal block labeled 'TO PUMP', to which the circulation pump(max. 5A/240V) or an electrical relay for a circulation pump can be connected. This connection makes it possible to control circulation pump operation with the heat pump.

However, we do not recommend that you wire the pool circulation pump to the heat pump.Run separate power supplies to the heat pump and the pool circulation pump. This allows the pool circulation pump to be put on a time clock and operated for the required time to give adequate filtration for the pool and also the pool circulation pump can be manually operated when required to backwash the filter etc.

Model	Voltage(V)	Fuse(C-curve)	Max current(A)	Cable section*
7kW-03127008	220-240V~,50Hz	12	7.2	3*2.5mm²
10kW-03127009	220-240V~,50Hz	16	10	3*2.5mm²
12,5kW-03127010	220-240V~,50Hz	20	12.5	3*2.5mm²
17kW-03127011	220-240V~,50Hz	25	16	3*4mm²
21kW-03127012	220-240V~,50Hz	25	17.5	3*4mm²

*Type of fuse:(1)Rated voltage: 250VAC(single phase), 500VAC(three phase)
(2)Low breaking capacity. (3) Time-lag fuse (T).

**** The power cable shall not be inferior to the chloroprene rubber sheathed flexible cable (No. 57 cable in the IEC 60245)!**

3.6 Wiring diagrams

blueplus nova 7kW-03127008,230V

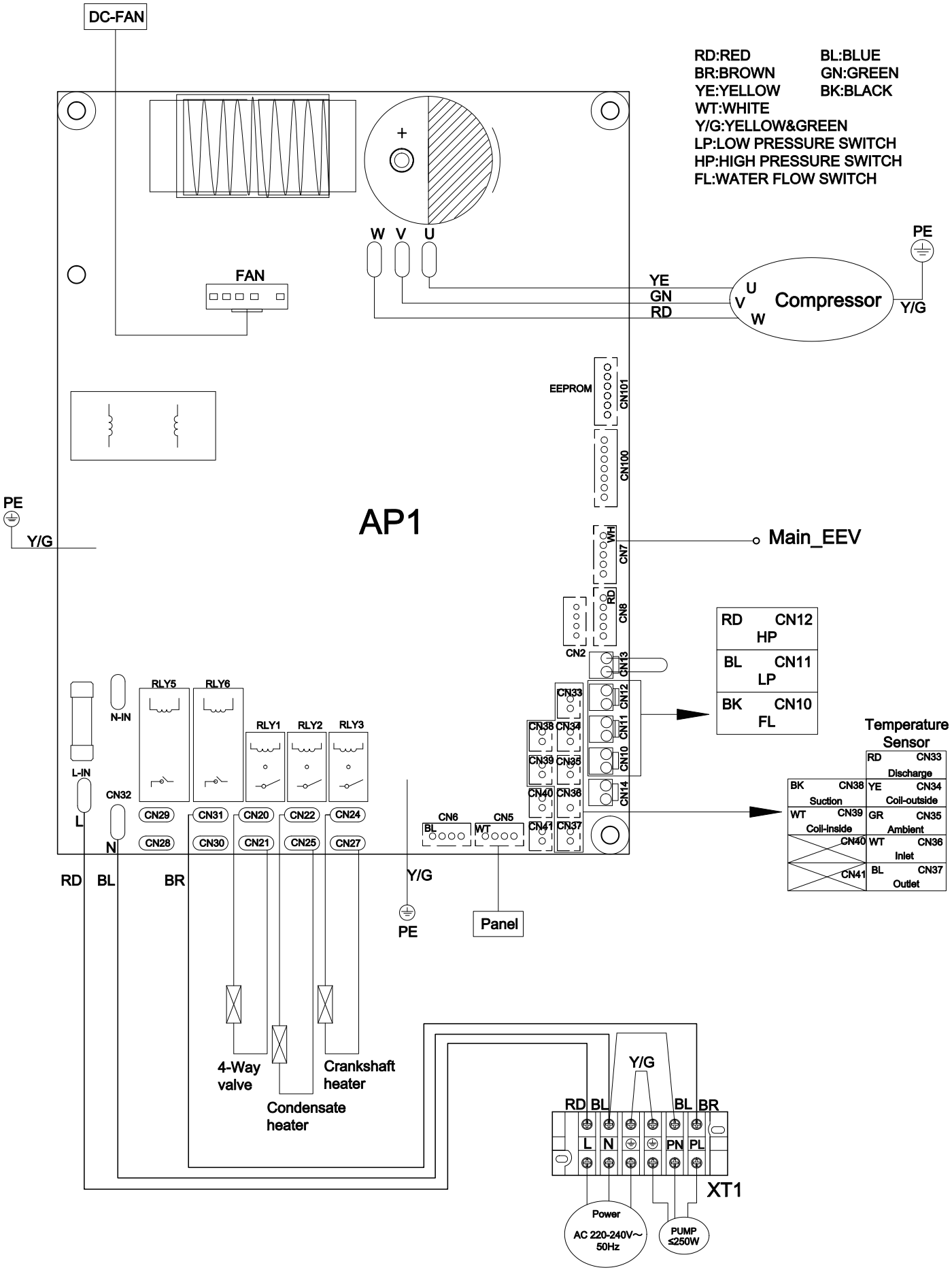

blueplus nova 10kW-03127009/12.5kW-03127010,230V

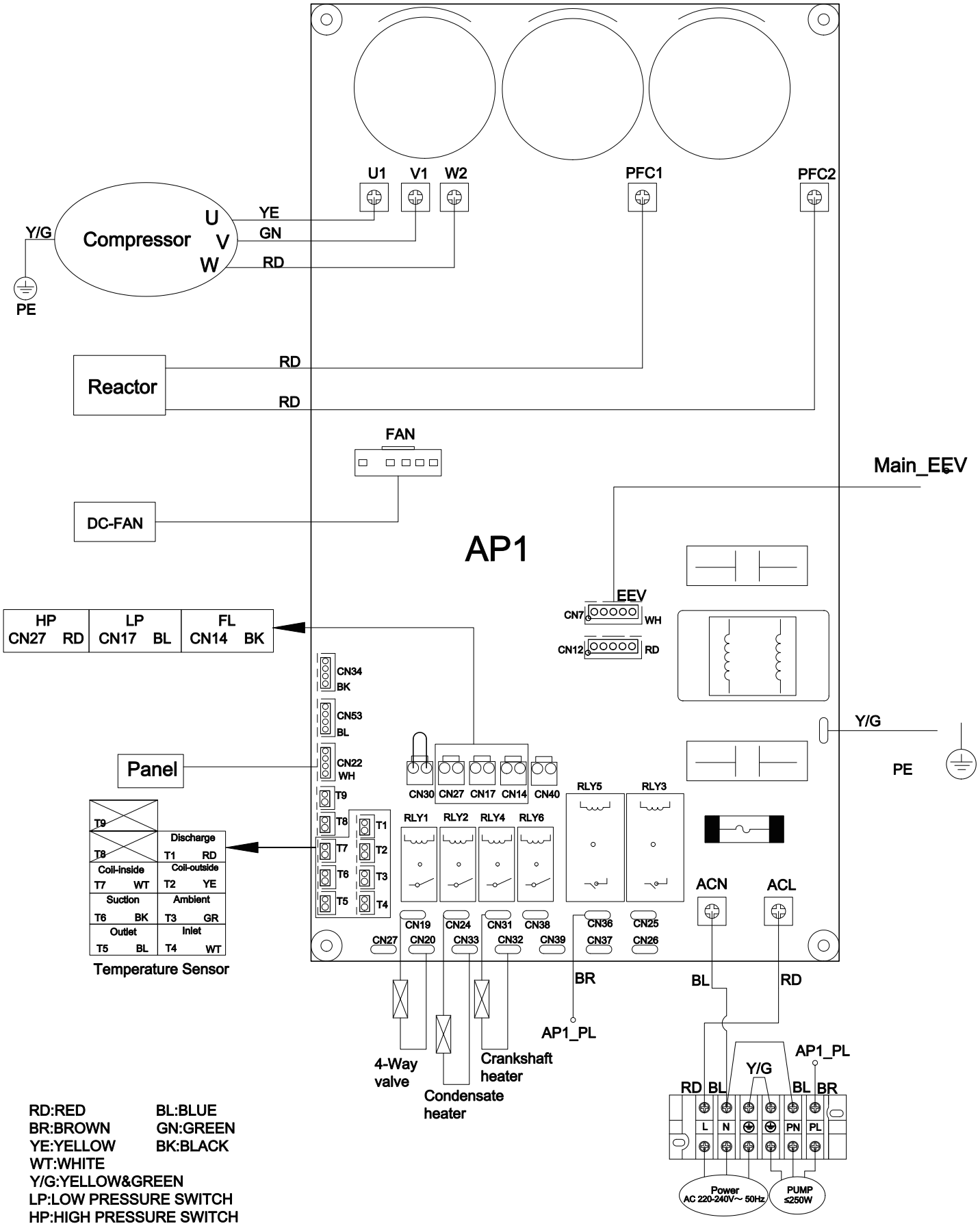

RD:RED BL:BLUE
BR:BROWN GN:GREEN
YE:YELLOW BK:BLACK
WT:WHITE
Y/G:YELLOW&GREEN
LP:LOW PRESSURE SWITCH
HP:HIGH PRESSURE SWITCH
FL:WATER FLOW SWITCH

blueplus nova17kW-03127011/21kW-03127012,230V

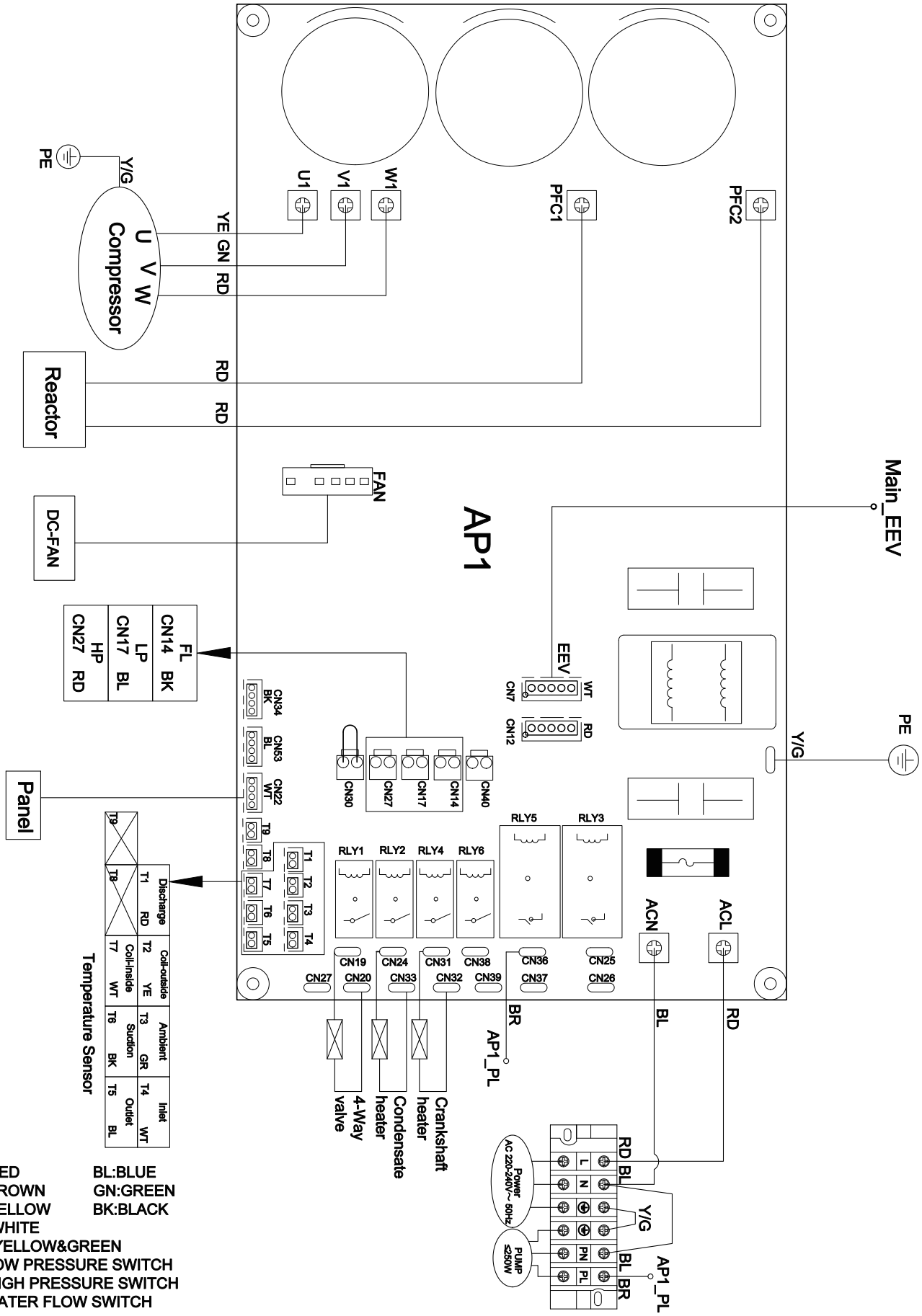

3.7 Initial start-up of the unit

NOTE - In order for the unit to heat the pool or spa, the fitlter pump must be running to circulate water through the heat exchanger.

Start up Procedure - After installation is completed, you should follow these steps:

* Turn on your filter pump. Check for water leaks and verify flow to and from the pool.
* Turn on the electrical power supply to the heat pump, then press the key ON/OFF of wire controller, It should start in several seconds.
* After running a few minutes make sure the air leaving the fan opening of the unit is cooler (between 5-10°C)
* With the unit operating turn the filter pump off. The unit should also turn off automatically,
* Allow the unit and pool pump to run 24 hours per day until desired pool water temperature is reached.When the desired pool water temperature reaches the setting, the unit just shuts off. The unit will now automatically restart (as long as your filter pump is running) when the pool temperature drops more than 2°C below set temperature.

Time Delay- The unit is equipped with a 3-minute built-in solid state restart delay included to protect control circuit components and to eliminate restart cycling and contactor chatter.
This time delay will automatically restart the unit approximately 3 minutes after each control circuit interruption. Even a brief power interruption will activate the solid state 3 minute restart delay and prevent the unit from starting until the 5 minute countdown is completed. Power interruptions during the delay period will have no effect on the 3 minute countdown.

3.8 Condensation

Since the Heat pump cools down the air about 5°C, water may condense on the fins of the evaporator.If the relative humidity is very high, this could be as much as several liters an hour. The water will run down the fins into the base pan and drain out through the barbed plastic condensation drain fitting on the side of the base pan.This fitting is designed to accept 20mm clear vinyl tubing which can be pushed on by hand and run to a suitable drain. It is easy to mistake the condensation for a water leak inside the unit.

TIP - A quick way to verify that the water is condensation is to shut off the unit and keep the pool pump running.If the water stops running out of the base pan, it is condensation. An even quicker way is to test the drain water for chlorine - if there is no chlorine present, then it's condensation.

4. Operation and use

4.1 Display interface introduction

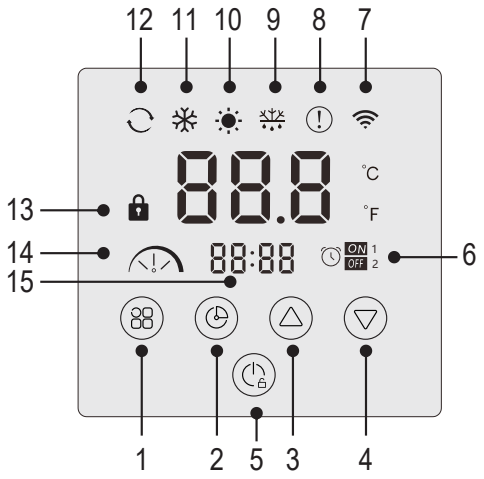

No.	Functions	No.	Functions
1	Mode	9	Defrosting state
2	Set	10	Heating mode
3	Up	11	Cooling mode
4	Down	12	Auto mode
5	Power On/Off	13	Lock
6	Timer On/Off	14	Silent /Eco /Boost mode
7	WiFi indicator	15	Time display
8	Fault indicator		

4.2 Operating instructions

4.2.1 Key lock and unclock

Press for 2 seconds

Lock indicator disappears

1.Lock: When there is no key operation for 1min, the screen will be locked, the " 🔒 " will be displayed on the screen and the key operation is invalid at this time.
2.Unclock: After locking, press the " ⏻ " for 2 seconds until " 🔒 " disappears.

4.2.2 Power On/Off

Power on

Power off

In the unlocked state, press " " for 2 seconds to switch “On / Off ”.

4.2.3 Switching the operating mode

Heating mode

Cooling mode

Auto mode

Make sure the screen is unlocked in the main interface.
Step 1: Press " " key to switch the working mode of the machine:
" " Heating→ " " Cooling→ " " Auto.

Silent mode

Eco mode

Boost mode

Step 2: Press " " key to switch the capability mode:
" " Silent mode→ " " Eco mode→ " " Boost mode.
(PS: The working mode and capability mode are switched separately. Under “Heating/Cooling “mode, there are three capability modes as above, the “Auto” mode is “Eco” mode by default and can’t be adjusted.

4.2.4 Temperature adjustment

Step 1

Step 2

Water inlet temperature

Step 1: In the main interface , press the " △ " key or " ▽ " key, the screen will display the current setting water inlet temperature.
Step 2: Press the " △ " key or " ▽ " again to adjust the value of setting water inlet temperature. After 3 seconds, the system will automatically exit the temperature setting, and the screen will resume to display the current water inlet temperature.

4.2.5 Time adjustment

Step 1

Step 2

Step 3

Step 4

Step 1: In the main interface, press " ▽" for 5 seconds to enter the real-time clock setting interface. The clock hour and minute flash together.

Step 2: In the real-time clock setting interface, press " ⏲ " , the digits in the hour part will flash, and the minute part will stop flashing. At this time, press " △" or " ▽" to set the hour of the realtime clock.

Step 3: After setting the hour part, press " ⏲ " again, the digits in the minute part will flash, and the hour part will stop flashing.At this time, press " △" or " ▽" to set the minutes of the realtime clock.

Step 4: After the minute part is set, press " ⏲ " again to confirm the real-time clock setting and return to the main interface.

NOTE:
1)In the real-time clock setting interface, press " ⏻ " can also confirm the current real-time clock setting value and return to the main interface.
2)In the real-time clock setting interface, when there is no key operation for 30 seconds, the current real-time clock setting value is also confirmed and return to the main interface.**

4.2.6 Timer setting

1)Set the timer function

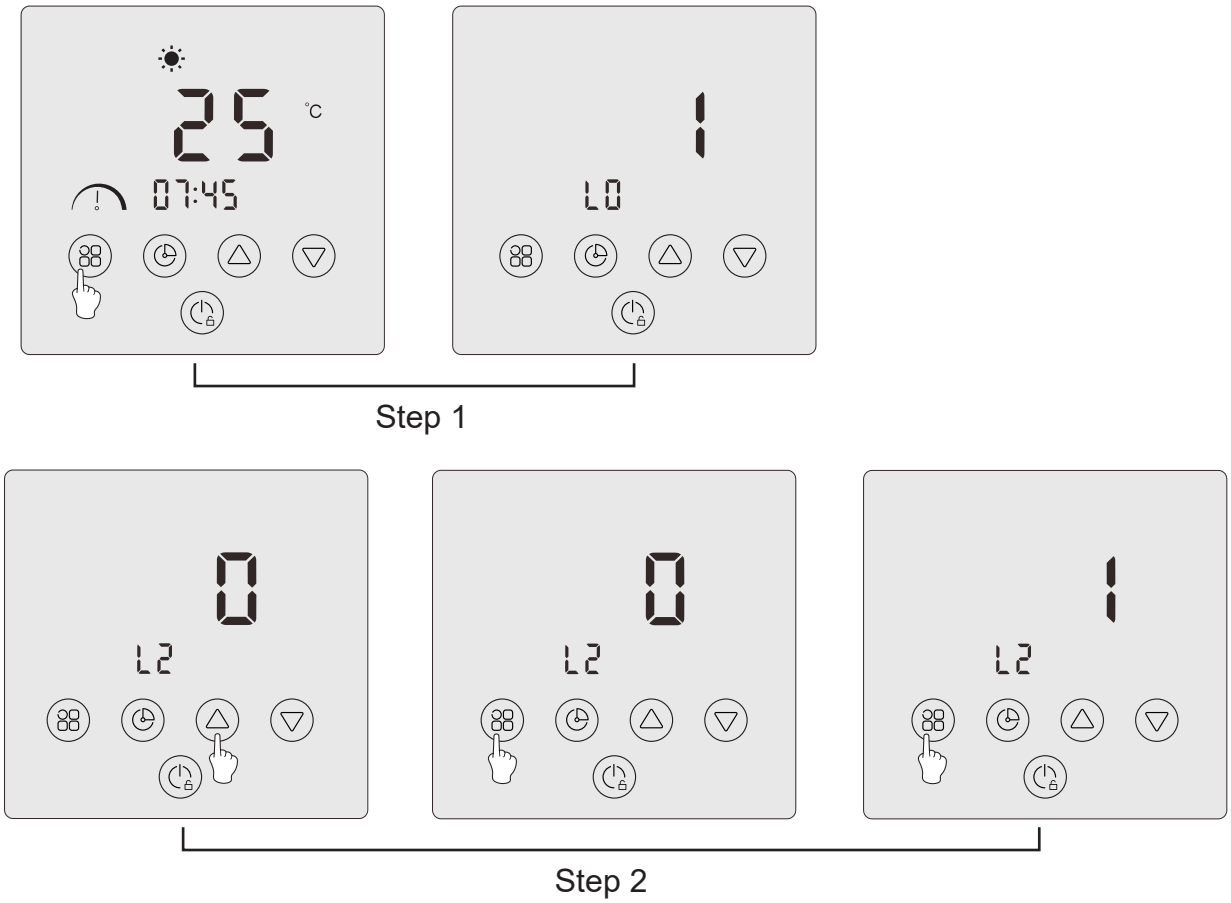

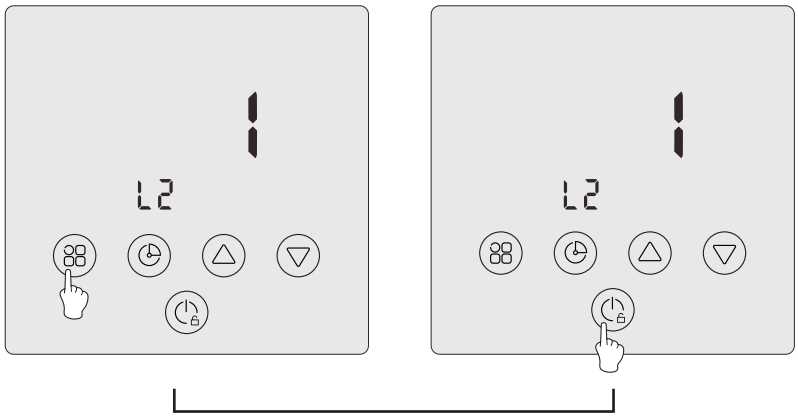

Step 3

Step 1: Press “ ” for 3 seconds to enter“ L” parameter setting.

Step 2: Press“ ”twice to “L2”, press “ ” again to enter the setting,press“ ” to set“ L2” parameter to “1”.

Step 3: Press “ ” to confirm, press “ ” to exit or wait 30 seconds to exit automatically.

2)Timer setting

Step 1

Step 2&3

Step 4

Step 5

Step 6

Step 1: On the main interface, press “ ”for 3 seconds to enter the setting of the group timer. When entering the group timer interface, group 1 flashes, and there are total 2 timer groups.

Step 2: When the group 1 flashes, press “ ” to enter the hour setting of “Timer On”, and the hour digits flashes, press “ ” or “ ” , you can set the hour of “Timer On”.

Step 3: After setting the hour of “Timer On”, press “ ” again to enter the minute setting of “Timer On”, the minute digits flashes. Press “ ” or “ ” to set the minute of “Timer On”.

Step 4: After setting the hour and minute of “Timer On”, press “ ” again to enter the setting of “Timer Off”. The setting method is the same as above.

Step 5: After setting the“Timer Off”, press “ ” again to confirm the “Timer On/ Off” of current group.

Step 6: Press “ ” or “ ” to enter the next group of “Timer On/ Off”. The same setting method as above group 1.

3)Turn on the timer function

Step 1

Step 2

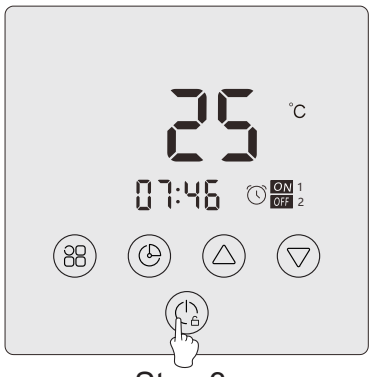

Step 3

Step 1: Press“ ” for 3 seconds to start the timer function of group 1, “ ON 1 OFF ” appear on the screen.

Step 2: Then press “ ” or “ ” to select group 2 , press “ ” for 3 seconds to start the timer function group 2,“ ON OFF 2 ” appear on the screen .

Step 3: Press “ ” once to confirm current setting and return to main interface.

4)Turn off the timer function

In the main interface, press “ ” for 3 seconds to enter the timer function of group,press “ ” or “ ” to select the group that needs to turn off the timer function,press “ ” for 3 seconds to turn off the timer function, and the“ ” disappear.

**PS:
1)If the timer group is valid, the group number will display on the main interface.
2)In a timer group, it’s invalid if “Timer On” and “Timer Off” are the same.
3)In the group timer interface, currently setting will be saved and return to the main interface automatically if there is no key operation for 30 seconds.

4.3 Parameter table

4.3.1 Temperature status query table

Press the “ △ ” for 3 seconds to enter, and then press the “ △ ” and “ ▽ ” to scroll up and down through the pages.

Parameter Code	Parameter Name	Remarks
T1	Discharge temperature	
T2	Coil-outside temperature	
T3	Ambient temperature	
T4	Water inlet temperature	
T5	Water outlet temperature	
T6	Suction temperature	
T7	Coil-inside temperature	
T8	Reserved	
T9	Reserved	
T10	IPM temperature	
T11	Reserved	
Ft	Target frequency	
Fr	Real time frequency	
1F	Opening degree of main EEV	
2F	Reserved	
od	Operation mode	1: Cooling, 4: Heating
Pr	Fan speed	DC: actual speed (display * 10)
dF	Defrosting status	
OIL	Oil return status	
r1	Crankshaft heater switch	On=ON oF=OFF
r2	Chassis electric heater switch	On=ON oF=OFF
r3	Reserved	
STF	Four-way valve switch	On=ON oF=OFF
HF	Reserved	
PF	Reserved	
PTF	Reserved	
Pu	Water pump switch	On=ON oF=OFF
AH	Ac fan high speed	
Ad	Ac fan medium speed	
AL	Ac fan low speed	
dcU	DC voltage	
dcC	Inverter compressor curent(A)	
AcU	AC input voltage	
AcC	AC input current	
HE1	Error code history last	
HE2	Error code history last -1	
HE3	Error code history last -2	
HE4	Error code history last -3	
Pr	Panel version	
Sr	Software version	

4.3.2 User parameters query table

Press the " ⊞ " for 3 seconds to enter, and then press the " △ " and " ▽ "to scroll up and down through the pages.

Parameter Code	Parameter Name	Adjustment range	Factory Default
L0	Operation mode of water pump	0:The water pump does not tum off when the heat pump reaches the set value and stops. 1: When the heat pump reaches the set value and stops, the water pump shuts down 60 seconds later than the compressor, and opens for 5 minutes every L1 minute.	0
L1	Interval operation time of water pump when the heat pump reaches the set value and stops	When the heat pump reaches the set value and stops water pump opens for 5 minutes every (L1) min,L1=3-180min	30
L2	Timer function	0: No timing function, the timing key is invalid, and the relevant timing icon disappears. 1: The daily timing is valid and can be set. After the timing is finished, the timing icon does not disappear.	0
L3	Power-off memory	0=OFF, 1=ON	1
L4			
L5	Operation mode	Range: 0 to 3, 0=heating; 1 = cooling; 2 = cooling, heating; 3=cooling, heating, automatic, boost heating, silent heating, boost cooling, silent cooling.	3
L6	Reserved	0/1	0

4.4 Error codes and troubleshooting

1.When the machine displays the following code, the machine may be in a protected or faulty state. You can troubleshoot according to the following suggestions.

Error Code	Description	Inspection and troubleshooting
E01	Exhaust temperature failure	1.Check/replace the sensor; 2. Check the status of the sensor head.
E05	Coil temperature failure	
E09	Return air temperature failure	
E13	Inner coil temperature failure	
E17	Return water temperature failure	
E18	Water outlet temperature failure	
E21	Communication failure	Please contact the supplier
E22	Ambient temperature failure	1. Check/replace the sensor. 2. Check the sensor head condition.
E25	Water flow switch failure	1. Check whether the water pump is installed correctly and can be started. 2. Check whether the water pipeline is not drained or blocked. 3. Check the water flow switch wiring or replace the water flow switch. 4.Check if the piping is installed correctly.
E27	Communication failure between main board and driver board	Please contact the supplier
E28	EEPROM error in main board	Please contact the supplier
E29	EEPROM error in driver board	
P02	High pressure protection (three consecutive times will lock the machine)	1. Replace the high pressure switch. 2. Drain the pipe air. 3. Install the water inlet temperature sensor correctly 4. Check or replace the circulating water pump 5.Discharge excess refrigerant. 6. Regularly clean the water heat exchanger.
P06	Low pressure protection (three consecutive times will lock the machine)	1.Check or replace throttling components; 2.Clean the evaporator fins; 3.Replace the low pressure switch; 4.Check the leakage position, repair it, re-vacuum and charge the refrigerant according to the refrigerant type and weight shown on the nameplate.
P11	High temperature protection of exhaust temperature	1. Check whether the water temperature sensor is installed in place. 2. Check the leakage position, repair it, re-vacuum and charge the refrigerant according to the refrigerant type and weight shown on the nameplate. 3. Regularly clean the water heat exchanger. 4. Check or replace the circulating water pump.
P15	Inlet and outlet water temperature difference protection	Check whether the pump is running normally and whether the water circuit is blocked.
P16	Cooling undercooling protection	Please contact the supplier
P17	Standby frost protection	Please contact the supplier

Error Code	Description	Inspection and troubleshooting
P19	Compressor current protection	Please contact the supplier
P24	DC fan protection and failure	Please contact the supplier
P25	Outdoor ambient temperature too high or too low protection	1. Detects if the current ambient temperature of the machine is out of range. 2. Check if the external ambient temperature sensor is installed correctly. 3.Ambient temperature sensor is damaged and needs to be replaced (after a period of downtime, check whether the ambient temperature display value is consistent with the current environment, If the deviation is large, it can be judged as sensor failure).
P27	Over temperature protection of outer coil during cooling	Please contact the supplier
R02	Compressor drive failure	1.Check whether the wiring is normal 2.Wire the wires in the correct order
R23	Compressor phase loss	
R05	IPM module overheat protection	Shut down, power on again after 5 minutes of power off
R06	Heat pump overcurent protection	Please contact the supplier
R10	DC voltage overvoltage protection	1.Normal input voltage range: -single-phase:182V~242V-three-phase:310-460V 2.It is recommended to power on at an interval of more than 2 mins, or wait for the code to disappear automatically
R11	DC voltage undervoltage protection	
R12	AC voltage overvoltage	Normal input voltage range: -single-phase: 182V~242V.-three-phase:310V~460V
R13	AC voltage undervoltage	
R24	Unstable input power voltage	Shut down, power on again after 5 minutes of power off
R21	Current overload protection(IPM software)	1. Shut down, power on again after 5 minutes of power off. 2.Water temperature setting too high. 3.Switch to ECO mode or silent mode operation.
R25	Current overload protection(IPM hardware)	
R28	Current overload protection(PFC software)	

4.4.1 The compressor does not start.

When the compressor does not start, it may be due to the following reasons:

* The machine is not turned on, please press the key to start the machine.

* The water temperature has reached the set temperature, and the machine stops working. Wait for the water temperature to change to a certain value and then restart the work automatically.

* The machine is under the start off protection. Due to the compressor's protection requirements, the system will start after 3 minutes every time after power on. This is a normal protection measurement.

* The machine is showing error code or enter other protection states. For details, see the description in the table above.

4.4.2 The fan is not running.

When the fan does not start, it may be due to the following reasons:

* The machine is not turned on, please press the key to start the machine

* If the water temperature has reached the set temperature or above, the machine stops heating. After the water temperature drops, heating can be resumed automatically.

* The machine is in a fault or other protection state. For details, see the description in the table at point 1.

5. Maintenance and inspection

* Check the water inlet and drainage often. The water and air inflow into the system should be sufficient so that its performance and reliability does not get compromised. You should clean the pool filter
regularly to avoid damage to the unit caused by clogging of the filter. • The area around the unit should be spacious and well ventilated. Clean the sides of the heat pump regularly to maintain good heat exchange and to save energy.
* Check if all processes in the unit are operational and pay special attention to the operation pres- sure of the refrigerant system.
* Check the power supply and cable connections regularly. Should the unit begin to function abnormally or should you notice a smell from an electrical component, arrange for timely repair or replacement.
* Winterizing : make sure to drain all the water from the heat pump and other systems in order to prevent frost damage. Damage caused by freezing is not covered by the warranty.
* You should also purge the water if the unit will not work for an extended period of time. You should check all parts of the unit thoroughly and completely fill the system with water before turning it on again afterwards.

6. Warranty

Thank you for purchasing our heat pump. To be announced by local agent/distributor.
For detailed warranty policy please contact local agent/distributor directly.

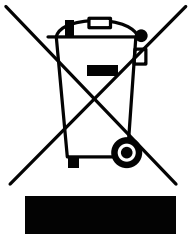

The symbol depicting a crossed-out waste bin ,that this product,
at the end of its useful life, must be handled separately from domestic
waste, must be taken to a recycling centre for electric and electronic
devices or handed back to the dealer when purchasing an equivalent appliance.