Item no.	Product
70233	Filtral UVC 1500

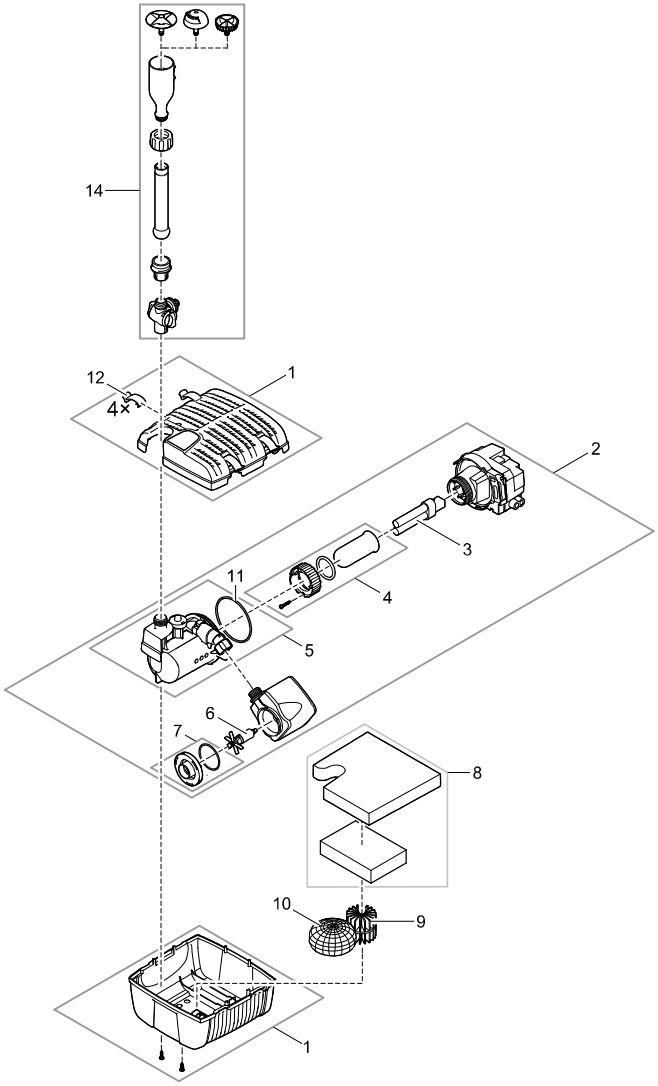

Pos.	Item no. Product	Product	Item no. Spare part	Spare part	Number
1	70233	Filtral UVC 1500 [INT]	72781	Replacement outer housing Filtral small	1
2	70233	Filtral UVC 1500 [INT]	72784	ASM replacement pump / UVC Filtral 1500	1
3	70233	Filtral UVC 1500 [INT]	57110	Replacement bulb UVC 5 W	1
4	70233	Filtral UVC 1500 [INT]	72792	ASM repl. quartz glass Filtral small	1
5	70233	Filtral UVC 1500 [INT]	72788	ASM repl. water housing Filtral small	1
6	70233	Filtral UVC 1500 [INT]	22647	Spare rotor cpl. ASE 750 magnetized	1
7	70233	Filtral UVC 1500 [INT]	35762	ASM pump housing ASE 1000	1
8	70233	Filtral UVC 1500 [INT]	70240	Replacement foam set Filtral UVC 1500	1
9	70233	Filtral UVC 1500 [INT]	19503	Bio surface element	1
10	70233	Filtral UVC 1500 [INT]	72795	Replacement ceramic bag Filtral small	1
11	70233	Filtral UVC 1500 [INT]	19945	O-Ring NBR 75 x 2.5 SH70	1
12	70233	Filtral UVC 1500 [INT]	72798	Replacement set clips Filtral	1
14	70233	Filtral UVC 1500 [INT]	70830	Additional pack Filtral small	1